TOWN OF LITTLE ELM
STANDARD DETAILS

LITTLEELM

INDEX

SHEET NUMBER	TITLE
1.	GENERAL CONSTRUCTION NOTES 1
2.	GENERAL CONSTRUCTION NOTES 2
3.	GENERAL CONSTRUCTION NOTES 3
4.	PAVING DETAILS
5.	BARRIER FREE RAMP DETAILS 1
6.	BARRIER FREE RAMP DETAILS 2
7.	MEDIAN AND SIDEWALK STAMPED CONCRETE DETAILS
8.	PAVEMENT MARKING DETAILS
9.	STORM SEWER DETAILS 1
10.	STORM SEWER DETAILS 2
11.	STORM SEWER DETAILS 3
12.	WATER SYSTEM DETAILS 1
13.	WATER SYSTEM DETAILS 2
14.	WATER SYSTEM DETAILS 3
15.	WATER SYSTEM DETAILS 4
16.	SANITARY SEWER DETAILS 1
17.	SANITARY SEWER DETAILS 2
18.	SANITARY SEWER DETAILS 3
19.	PARKS DETAILS
20.	MISCELLANEOUS DETAILS 1
21.	MISCELLANEOUS DETAILS 2

CONSTRUCTION
GENERAL NOTES

GENERAL NOTES

1. IT IS NOT THE INTENT OF THESE CONSTRUCTION NOTES TO COVER ALL DETAILS AND/OR SPECIFICATION REQUIREMENTS OF THE TOWN OF LITTLE ELM. IT IS THE CONTRACTOR'S RESPONSIBILITY TO MEET ALL REQUIREMENTS OF THE TOWN OF LITTLE ELM, WHETHER OR NOT THE REQUIREMENTS ARE SPECIFICALLY STATED IN THE PLANS OR SPECIFICATIONS.

2. THE EXISTENCE AND LOCATIONS OF ALL UNDERGROUND UTILITIES SHOWN (MAIN LINES, NO LATERAL OR SERVICES SHOWN) ON THE DRAWINGS WERE OBTAINED FROM AVAILABLE RECORDS AND ARE APPROXIMATE. NO WARRANTY IS IMPLIED AS TO THE ACTUAL LOCATION OF EXISTING UTILITIES. NEITHER THE OWNER NOR THE ENGINEER ASSUMES ANY RESPONSIBILITY FOR UTILITIES NOT SHOWN OR NOT IN THE LOCATION SHOWN. THE CONTRACTOR SHALL DETERMINE THE DEPTH AND LOCATION OF EXISTING UNDERGROUND UTILITIES PRIOR TO TRENCHING AND SHALL BE REQUIRED TO TAKE ANY PRECAUTIONARY MEASURES TO PROTECT ALL LINES SHOWN AND / OR ANY OTHER UNDERGROUND UTILITIES NOT OF RECORD OR NOT SHOWN ON THE PLANS. CONTRACTOR SHALL BE RESPONSIBLE FOR CONTACTING ALL FRANCHISE AND TOWN UTILITIES PRIOR TO CONSTRUCTION.

3. ANY CONTRACTOR / SUBCONTRACTOR PERFORMING WORK ON THIS PROJECT SHALL FAMILIARIZE HIMSELF WITH THE SITE AND SHALL BE SOLELY RESPONSIBLE FOR ANY DAMAGE TO EXISTING FACILITIES RESULTING DIRECTLY OR INDIRECTLY FROM HIS OPERATIONS. SAID EXISTING IMPROVEMENTS SHALL INCLUDE BUT NOT BE LIMITED TO BERMS, DITCHES, FENCES, AND VEGETATION. ANY REMOVAL OR DAMAGE TO EXISTING IMPROVEMENTS SHALL BE REPLACED OR REPAIRED BY THE CONTRACTOR AT HIS EXPENSE AND SHALL BE APPROVED BY THE TOWN OF LITTLE ELM.

4. ALL CONSTRUCTION, TESTING, AND MATERIALS SHALL MEET OR EXCEED ALL REQUIREMENTS OF THE TOWN OF LITTLE ELM. ALL SUBMITTALS MUST BE ORIGINALS WITH SIGNATURES WHERE APPLICABLE; FACSIMILES WILL NOT BE ACCEPTED.

5. TESTING SERVICES FOR PUBLIC PROJECTS SHALL BE PROVIDED BY THE TOWN. COSTS ASSOCIATED WITH THESE TESTS SHALL BE PAID BY THE TOWN. RE-TEST OF FAILED AREAS THAT DO NOT MEET THE REQUIREMENTS STATED WITHIN SHALL BE PAID FOR BY THE CONTRACTOR.

6. THE DEVELOPER ON PRIVATE CONTRACTS OR THE TOWN ON PUBLIC CONTRACTS OR HIS/HER DESIGNEE SHALL BE RESPONSIBLE FOR FURNISHING AND INSTALLING ALL TEMPORARY AND PERMANENT TRAFFIC CONTROL IN ACCORDANCE WITH THE MINIMUM REQUIREMENTS OF THE LATEST REVISION OF THE TEXAS MANUAL ON UNIFORM TRAFFIC CONTROL HANDBOOK. ALL REFERENCE FOR USING TEXAS DEPARTMENT OF TRANSPORTATION (TXDOT) STANDARDS AND CONSTRUCTION DETAILS SHALL BE THE LATEST REVISIONS AND/OR AMENDMENTS THEREOF. THE TOWN OF LITTLE ELM USES RAISED PAVEMENT MARKINGS (BUTTONS) FOR STRIPING AND THERMOPLASTIC MARKINGS IN LIEU OF PAINT. THE MINIMUM SIGN SIZE SHALL BE THE STANDARD SIZE IN THE MANUAL. DETAILS ARE AVAILABLE UPON REQUEST FOR THE TYPE OF BUTTON PATTERNS, POSTS, AND CONNECTIONS REQUIRED FOR THE SIGNS.

7. THE CONTRACTOR SHALL MAKE EVERY EFFORT NOT TO IMPEDE TRAFFIC ON EXISTING STREETS, ALLEYS, OR FIRE LANES OPEN TO THE PUBLIC. IN THE EVENT THE CONSTRUCTION WORK REQUIRES THE CLOSURE OF AN EXISTING STREET, ALLEY, OR FIRE LANE, THE CONTRACTOR SHALL REQUEST THE ROAD CLOSURE THROUGH THE TOWN. IF THE CLOSURE ELIMINATES THE SECOND POINT OF ACCESS TO EXISTING BUILDINGS WITH A CERTIFICATE OF OCCUPANCY, THEN THE ACCESS MAY NOT BE CLOSED FOR MORE THAN FORTY-EIGHT (48) HOURS AND WILL REQUIRE FIRE MARSHAL APPROVAL IN EITHER CASE. UNLESS OTHERWISE SPECIFIED BY THE TOWN, ALL OTHER STREETS OR ALLEYS MAY NOT BE CLOSED FOR MORE THAN SEVENTY-TWO (72) HOURS.

8. THE CONTRACTOR SHALL INSTALL TEMPORARY FENCES TO PROTECT HORSES AND LIVESTOCK WHERE NECESSARY.

9. ALL CONCRETE STRUCTURES, WHETHER PRECAST OR CAST-IN-PLACE, SHALL BE DESIGNED WITH APPROPRIATE SULFATE RESISTANT CEMENT OR EQUIVALENT BASED ON LOCAL SOIL CONDITIONS PER GEOTECHNICAL REPORT. PRECAST MANHOLES OR OTHER SPECIAL STRUCTURES IN ANY RIGHT-OF-WAY OR FIRE LANE EASEMENTS WILL REQUIRE A CERTIFICATION FROM THE MANUFACTURER THAT THE PRODUCT MEETS THE DESIGN CRITERIA AND TWENTY-EIGHT (28) DAY COMPRESSIVE STRENGTH. CAST-IN-PLACE MANHOLES OR OTHER SPECIAL STRUCTURES IN ANY RIGHT-OF-WAY AND FIRE LANE OR UTILITY EASEMENTS WILL REQUIRE CYLINDERS TO BE MADE FOR STRENGTH TESTS BY AN APPROVED LABORATORY. LABORATORY TEST REPORTS SHALL BE SUBMITTED TO THE DESIGN ENGINEER FOR APPROVAL. SAMPLES FOR STRENGTH TESTS OF EACH CLASS OF CONCRETE PLACED EACH DAY SHALL BE TAKEN NOT LESS THAN ONCE A DAY, NOR LESS THAN ONCE FOR EACH 100-150 CU YD OF CONCRETE, NOR LESS THAN ONCE FOR EACH 5000 SQ FT OF SURFACE AREA FOR SLABS OR WALLS. FOUR (4) CYLINDERS SHALL BE MADE: ONE (1) SHALL BE BROKEN AT SEVEN (7) DAYS, TWO (2) SHALL BE BROKEN AT TWENTY-EIGHT (28) DAYS, AND ONE (1) SHALL BE HELD IN CASE OF DAMAGE OF ANY OF THE OTHER THREE (3). THE AVERAGE STRENGTH OF TWO (2) CYLINDERS FROM THE SAME SAMPLE, TESTED AT TWENTY-EIGHT (28) DAYS, IS REQUIRED FOR EACH STRENGTH TEST; ANY STRENGTH TEST BEYOND TWENTY-EIGHT (28) DAYS IS UNACCEPTABLE. IF THE TWENTY-EIGHT (28) DAY DESIGN STRENGTH IS NOT REACHED UPON STRENGTH TESTING THE CYLINDERS, THE DEFICIENT AREA SHALL BE CORED IMMEDIATELY TO BE PROVED OUT. FOR ANY AREAS DEFICIENT IN STRENGTH BY NOT MORE THAN 500 PSI, THE CONTRACTOR SHALL PAY TO THE TOWN ONE (1) TIME THE UNIT BID PRICE PER SQUARE YARD FOR THE AREA DETERMINED TO DEFICIENT IN STRENGTH. FOR ANY AREAS DEFICIENT IN STRENGTH BY MORE THAN 500 PSI BUT NOT MORE THAN 1000 PSI, THE CONTRACTOR SHALL PAY TO THE TOWN TWO (2) TIMES THE UNIT BID PRICE PER SQUARE YARD FOR THE AREA DETERMINED TO DEFICIENT IN STRENGTH. FOR ANY AREAS DEFICIENT IN STRENGTH BY MORE THAN 1000 PSI, THE STRUCTURE SHALL BE REMOVED AND RECONSTRUCTED AT THE FULL EXPENSE OF THE CONTRACTOR. PRIOR TO TOWN ACCEPTANCE OF ANY PENALTY PAYMENTS FOR ANY TRAFFIC BEARING STRUCTURE THAT DOES NOT MEET TWENTY-EIGHT (28) DAY DESIGN STRENGTH; THE DESIGN ENGINEER SHALL PROVIDE A SEALED STRUCTURAL EVALUATION THAT ASSESSES THE PERFORMANCE ADEQUACY OF THE DEFICIENT STRUCTURE AS CONSTRUCTED UNDER THE DESIGN SERVICE LOADS. ALL CORING AND ADDITIONAL LABORATORY TESTING SHALL BE AT THE EXPENSE OF THE CONTRACTOR.

10. BLASTING IS NOT PERMITTED ON THIS PROJECT.

11. ALL CONSTRUCTION OPERATIONS SHALL BE ACCOMPLISHED IN ACCORDANCE WITH APPLICABLE REGULATIONS OF THE U.S. OCCUPATIONAL SAFETY AND HEALTH ADMINISTRATION.

12. THESE PLANS DO NOT EXTEND TO OR INCLUDE DESIGNS OR SYSTEMS PERTAINING TO THE SAFETY OF THE CONSTRUCTION CONTRACTOR OR ITS EMPLOYEES, AGENTS OR REPRESENTATIVES IN THE PERFORMANCE OF THE WORK. THE SEAL OF THE REGISTERED PROFESSIONAL ENGINEER(S) HEREON DOES NOT EXTEND TO ANY SUCH SAFETY SYSTEMS THAT MAY NOW OR HEREAFTER BE INCORPORATED IN THE WORK.

13. THE TRENCH EXCAVATION AND SHORING SAFETY SYSTEM, AS OUTLINED IN THE TECHNICAL SPECIFICATIONS, WILL BE REQUIRED AS A MINIMUM TRENCH SAFETY MEASURE.

14. A PRE-CONSTRUCTION CONFERENCE IS TO BE HELD PRIOR TO BEGINNING CONSTRUCTION. THIS CONFERENCE SHALL TAKE PLACE AT A LOCATION SELECTED BY OWNER & ENGINEER. CONTRACTOR TO ARRANGE A MEETING DATE WITH THE OWNER AT LEAST SEVEN DAYS PRIOR TO THE MEETING TIME.

15. CONTRACTOR SHALL NOTIFY THE OWNER, OWNER'S REPRESENTATIVE, AND TCEQ (IF APPLICABLE) BY TELEPHONE A MINIMUM OF 48 HOURS IN ADVANCE OF CONSTRUCTION STARTUP, FOLLOWED BY A LETTER OF CONFIRMATION.

16. CONTRACTOR SHALL ASSURE HIMSELF THAT ALL CONSTRUCTION PERMITS HAVE BEEN OBTAINED PRIOR TO COMMENCEMENT OF WORK. REQUIRED PERMITS THAT CAN ONLY BE ISSUED TO CONTRACTOR ARE TO BE OBTAINED AT THE CONTRACTORS EXPENSE.

17. CONTRACTOR SHALL GIVE A MINIMUM OF 48 HOURS NOTICE TO ALL AUTHORIZED INSPECTORS, SUPERINTENDENTS, OR PERSONS IN CHARGE OF PRIVATE AND PUBLIC UTILITIES AFFECTED BY HIS OPERATIONS PRIOR TO COMMENCEMENT OF WORK.

18. CONTRACTOR SHALL TAKE ALL DUE PRECAUTIONS TO PROTECT EXISTING FACILITIES FROM DAMAGE. ANY DAMAGE TO EXISTING FACILITIES INCURRED AS A RESULT OF THESE CONSTRUCTION OPERATIONS ARE TO BE REPAIRED IMMEDIATELY BY THE CONTRACTOR TO AT LEAST THE PRE-EXISTING CONDITION AT NO ADDITIONAL COST TO OWNER.

19. WHEN UNLOCATED OR INCORRECTLY LOCATED UNDERGROUND PIPING OR A BREAK IN A LINE OR OTHER UTILITIES AND SERVICES ARE ENCOUNTERED DURING SITE WORK OPERATIONS, THE CONTRACTOR SHALL NOTIFY THE APPLICABLE UTILITY COMPANY IMMEDIATELY TO OBTAIN PROCEDURE DIRECTIONS. THE CONTRACTOR SHALL COOPERATE WITH THE APPLICABLE UTILITY COMPANY IN MAINTAINING ACTIVE SERVICES IN OPERATION.

20. THE CONTRACTOR SHALL MAINTAIN ACCESS TO PUBLIC AND PRIVATE FACILITIES DURING CONSTRUCTION. CONSTRUCTION ACTIVITIES TO BE COORDINATED WITH THE OWNER.

21. THE CONTRACTOR SHALL COORDINATE INTERRUPTIONS OF ALL UTILITIES AND SERVICES WITH APPLICABLE UTILITY COMPANY OR COMPANIES. ALL WORK SHALL BE IN ACCORDANCE WITH THE REQUIREMENTS OF THE APPLICABLE UTILITY COMPANY OR AGENCY INVOLVED.

22. THE CONTRACTOR SHALL LOCATE, PROTECT, AND MAINTAIN BENCHMARKS, MONUMENTS, AND CONTROL POINTS. THE CONTRACTOR SHALL RE-ESTABLISH DISTURBED OR DESTROYED ITEMS BY A REGISTERED PUBLIC SURVEYOR IN THE STATE OF TEXAS, AT NO ADDITIONAL COST TO OWNER.

23. EXISTING PAVING, BUILDING, AND OTHER ITEMS SHOWN ON PLANS NOT SPECIFICALLY RELATED TO THE WORK OF THE CONTRACTOR IS FOR INFORMATION ONLY.

24. DEMOLITION PERMITS (IF NEEDED) ARE TO BE OBTAINED BY THE CONTRACTOR.

25. COORDINATES SHOWN FOR STRUCTURE LOCATIONS ARE REFERENCED TO OUTSIDE FACE OF EXTERIOR WALL AT GRADE OR TO CENTERLINE OF STRUCTURE, UNLESS OTHERWISE ON PLANS.

26. EXISTING SURFACE AND SUBSURFACE STRUCTURES (GAS MAINS, WATER MAINS, STORM SEWERS, TELEPHONE CABLES, ETC.) ARE SHOWN ON THE PLANS IF THEIR LOCATION HAS BEEN DETERMINED, BUT IT SHALL BE THE RESPONSIBILITY OF THE CONTRACTOR TO AVOID DAMAGING THESE EXISTING STRUCTURES WHETHER OR NOT THEY ARE SHOWN ON THE PLANS. THE OWNER AND ENGINEER ASSUME NO RESPONSIBILITY FOR FAILURE TO SHOW ANY OR ALL OF THESE STRUCTURES ON THE PLANS OR TO SHOW THEM IN THEIR EXACT LOCATION. IF ANY STRUCTURE IS DAMAGED BY THE CONTRACTOR, IT SHALL BE HIS RESPONSIBILITY TO REPAIR THE DAMAGE AT HIS OWN EXPENSE AND RESTORE THE STRUCTURE TO ITS ORIGINAL CONDITION.

27. IT SHALL BE THE CONTRACTOR'S RESPONSIBILITY TO VERIFY LOCATIONS, ELEVATIONS AND DIMENSIONS OF ADJACENT AND/OR CONFLICTING UTILITIES IN ADVANCE OF CONSTRUCTION IN ORDER THAT ADJUSTMENTS CAN BE MADE TO PROVIDE ADEQUATE CLEARANCES, IF REQUIRED. THE CONTRACTOR SHALL PRESERVE AND PROTECT PUBLIC UTILITIES AT ALL TIMES DURING CONSTRUCTION. ANY DAMAGE TO UTILITIES RESULTING FROM THE CONTRACTOR'S OPERATIONS SHALL BE RESTORED AT HIS EXPENSE. THE ENGINEER SHALL BE NOTIFIED WHEN PROPOSED FACILITY GRADES CONFLICT WITH EXISTING UTILITY GRADES.

28. THE CONTRACTOR SHALL BE RESPONSIBLE FOR PROVIDING "AS-RECORDED" PLANS TO THE ENGINEER OF RECORD SHOWING THE LOCATION OF ALL DRAINAGE STRUCTURES. THIS INFORMATION SHALL BE PLACED ON THE ENGINEERING PLANS AND MARKED "RECORD DRAWING" PLANS ALONG WITH THE DATE AND THE NAME OF THE CONTRACTOR BY THE ENGINEER OF RECORD. COPIES OF THESE "RECORD DRAWING" PLANS SHALL BE FURNISHED TO THE TOWN ON MYLARS, BLACKLINE PRINTS, AND ELECTRONICALLY AS REQUIRED UNDER THE TOWN'S "FINAL ACCEPTANCE CHECKLIST."

29. THE CONTRACTOR SHALL FURNISH A MAINTENANCE BOND IN THE AMOUNT OF 10 % (TEN PERCENT) OF THE TOTAL CONTRACT PRICE TO THE TOWN TO RUN TWO (2) YEARS FROM THE DATE OF FINAL ACCEPTANCE OF THE PROJECT BY THE TOWN.

GENERAL ENVIRONMENTAL NOTES

1. CONTRACTOR SHALL COMPLY WITH ALL APPLICABLE LOCAL, STATE, AND FEDERAL REQUIREMENTS REGARDING EXCESS AND WASTE MATERIAL, INCLUDING METHODS OF HANDLING AND DISPOSAL.

2. CONTRACTOR SHALL LOCATE MATERIAL STORAGE AREAS AWAY FROM STORMWATER CONVEYANCE SYSTEMS. PROVIDE PROTECTED STORAGE AREAS FOR CHEMICALS, PAINTS, SOLVENTS, FERTILIZERS, AND OTHER POTENTIALLY TOXIC MATERIALS.

3. FUEL STORAGE IS NOT ALLOWED ON THIS PROJECT.

4. THE CONTRACTOR SHALL ADVISE OWNER IMMEDIATELY, VERBALLY AND IN WRITING, OF ANY FUEL OR TOXIC MATERIALS SPILLS WITHIN THE PROJECT/CONSTRUCTION AREA AND THE ACTIONS TO BE TAKEN TO REMEDY THE PROBLEM.

5. THE CONTRACTOR SHALL DISPOSE OF FUELS, HAZARDOUS MATERIALS, AND CONTAMINATED EXCAVATIONS IN A LEGALLY APPROVED MANNER.

6. NO OPEN BURNING IS ALLOWED WITHIN THE CITY LIMITS.

STORMWATER NOTES

1. THROUGHOUT THE CONSTRUCTION, AND AT THE COMPLETION OF CONSTRUCTION, THE CONTRACTOR SHALL ASSURE THAT DRAINAGE OF STORMWATER RUNOFF IS NOT BLOCKED.

2. DURING CONSTRUCTION, THE STORM WATER RUNOFF FROM ALL DISTURBED AREAS SHALL BE FILTERED BY SILT FENCES AND/OR ROCK BERMS. THESE TEMPORARY EROSION AND SEDIMENTATION CONTROLS ARE TO REMAIN IN PLACE UNTIL THE DISTURBED AREAS ARE REVEGETATED AND THE AREAS HAVE BECOME PERMANENTLY STABILIZED. ALL TEMPORARY EROSION AND SEDIMENTATION CONTROLS SHALL BE INSPECTED PERIODICALLY FOR DAMAGE CAUSED BY CONSTRUCTION ACTIVITIES AND FOLLOWING EVERY RAINFALL. DAMAGED OR OBSTRUCTED CONTROLS TO BE REPAIRED/REPLACED AS NECESSARY TO MAINTAIN THEIR PROPER OPERATION.

SITE GRADING NOTES

1. THE CONTRACTOR SHALL CONTROL DUST CAUSED BY THE WORK AND COMPLY WITH POLLUTION CONTROL REGULATIONS OF GOVERNING AUTHORITIES.

2. EXCESS EXCAVATED MATERIAL SHALL BE STOCKPILED IN DESIGNATED AREA AS SHOWN ON PLANS OR AS DIRECTED BY THE OWNER. REINFORCED FILTER FABRIC FENCE TO BE INSTALLED AROUND STOCKPILE ON DOWNSTREAM SIDE AND BOTH SIDES ADJACENT TO THE DOWNSTREAM SIDE. STOCKPILES ARE NOT TO TRAP OR POND WATER. TOPSOIL TO BE STOCKPILED SEPARATELY. ALL EXCESS EXCAVATED MATERIAL IS TO BE REMOVED FROM THE SITE, CONTRACTOR TO NOTIFY TCEQ AND THE OWNER'S REPRESENTATIVE OF LOCATION OF DISPOSAL BEFORE MATERIAL IS REMOVED.

3. THE FINISHED GRADE ELEVATIONS SHOWN ARE INTENDED TO PROVIDE ADEQUATE DRAINAGE. MINOR FIELD CHANGES MAY BE NECESSARY TO PROVIDE ADEQUATE DRAINAGE. GRADE UNIFORMLY BETWEEN ELEVATIONS SHOWN TO PROVIDE DRAINAGE.

4. ADJUST MANHOLE COVERS, VALVE BOXES, ELECTRICAL MANHOLES, ETC. TO MATCH PROPOSED FINISHED GRADE (NO SEPARATE PAY).

EROSION/SEDIMENTATION & TREE PROTECTION NOTES

1. THE CONTRACTOR TO INSTALL AND MAINTAIN EROSION/SEDIMENTATION CONTROLS AND TREE/NATURAL AREA PROTECTIVE FENCING PRIOR TO ANY SITE PREPARATION WORK (CLEARING, GRUBBING, GRADING, OR EXCAVATION). CONTRACTOR TO REMOVE EROSION/SEDIMENTATION CONTROLS AT THE COMPLETION OF PROJECT AND GRASS RESTORATION.

2. THE PLACEMENT OF EROSION/SEDIMENTATION CONTROLS TO BE IN ACCORDANCE WITH THE PROPOSED SITE GRADING PLAN. DEVIATIONS FROM THE PLAN MUST BE SUBMITTED TO AND APPROVED BY THE OWNER.

3. EROSION AND SEDIMENTATION CONTROLS TO BE INSTALLED OR MAINTAINED IN A MANNER WHICH DOES NOT RESULT IN SOIL BUILDUP WITHIN TREE DRIPLINES.

4. TO AVOID SOIL COMPACTION, NO VEHICULAR TRAFFIC, PARKING, OR STORAGE OF EQUIPMENT OR MATERIALS IS ALLOWED IN THE TREE DRIPLINE AREAS.

5. TREES TO BE REMOVED IN A MANNER WHICH DOES NOT IMPACT TREES TO BE PRESERVED.

6. INTENTIONAL RELEASE OF VEHICLE OR EQUIPMENT FLUIDS ONTO THE GROUND IS NOT ALLOWED. CONTAMINATED SOIL RESULTING FROM ACCIDENTAL SPILL TO BE REMOVED AND DISPOSED OF PROPERLY.

DATE	REVISION	NO.

DESIGN BY:	TRC
DRAWN BY:	TRC
CHECKED BY:	TRC
SCALE:	NONE
JOB NUMBER:	-

TOWN OF LITTLE ELM, TEXAS
STANDARD DETAILS
GENERAL CONSTRUCTION NOTES 1 OF 3

LITTLEELM

SHEET
1 OF 21

MAY 2016

CONSTRUCTION
GENERAL NOTES

PAVING NOTES

1. ABSOLUTELY NO EARTHWORK, LIME APPLICATION, OR OTHER PREPARATION OF THE SUBGRADE FOR PAVING OF STREETS, ALLEYS, OR FIRE LANES SHALL BE INITIATED WITHOUT AUTHORIZATION FROM THE TOWN'S CONSTRUCTION INSPECTOR. ONCE ALL TESTING OF UNDERGROUND FACILITIES HAS BEEN COMPLETED AND VERIFIED TO MEET THE TOWN'S SPECIFICATIONS, THE TOWN CONSTRUCTION INSPECTOR WILL ISSUE A LETTER TO THE PROJECT OWNER OR SUPERINTENDENT THAT WILL AUTHORIZE THE INITIATION OF ALL SUBGRADE WORK IN PREPARATION FOR PAVING. ALL STREET, ALLEY, AND FIRE LANE RIGHT–OF–WAY OR EASEMENT WIDTH SHALL BE EXCAVATED FULL WIDTH IN ACCORDANCE WITH THE STREET AND SIDEWALK SECTION TO BE CONSTRUCTED. THE SUBGRADE FOR ALL STREETS, ALLEYS, AND FIRE LANES SHALL BE STABILIZED WITH HYDRATED LIME MATERIAL TO A DISTANCE 24 INCHES BEYOND THE BACK OF CURB OR EDGE OF PAVING AS APPLICABLE. THE AMOUNT OF LIME MATERIAL SHALL BE THAT AMOUNT WHICH WILL REDUCE THE PLASTICITY INDEX (PI) BELOW FIFTEEN (15) AS VERIFIED BY TESTING BY AN APPROVED LABORATORY; THE TOWN WILL ADD ONE (1) PERCENT TO THE LABORATORY RESULTS FOR FIELD VARIATION. LABORATORY TESTING (LIME SERIES) SHALL GENERALLY BE CONDUCTED WHEN ALL UTILITIES ARE COMPLETE AND THE ROADWAY SUBGRADE IS COMPLETE. LIME SHALL BE APPLIED BY PERCENTAGE DRY UNIT WEIGHT OF SOIL TREATED TO A MINIMUM IN PLACE COMPACTED THICKNESS OF EIGHT (8) INCHES. SULFATE TESTS SHALL ALSO BE CONDUCTED ON ALL PAVING PROJECTS IN THE TOWN UNDER THE DIRECTION OF THE APPROVED LABORATORY. FREQUENCY OF TESTS SHALL NOT EXCEED EVERY 300 LINEAR FEET OF SUBGRADE, ALTERNATING FROM LEFT QUARTER POINT TO CENTER LINE TO RIGHT QUARTER POINT. ADDITIONAL TESTING MAY BE DEEMED NECESSARY BY THE TOWN ENGINEER. ALL TESTING FOR THE PRESENCE OF SULFATES IN THE PAVEMENT SUBGRADE SHALL BE AT THE CONTRACTOR'S EXPENSE. IF THE SULFATES ARE PRESENT AT AN UNACCEPTABLE CONCENTRATION, THE TOWN MAY REQUIRE A RECOMMENDATION FOR FURTHER TREATMENT OF THE SOIL FROM THE APPROVED LABORATORY, WHICH SHALL BE CONFIRMED BY THE DESIGN ENGINEER OF RECORD FOR THE PROJECT.

2. SUBGRADE TESTING REQUIREMENTS: ALL FILL SHALL BE COMPACTED TO NO LESS THAN 95% OF STANDARD PROCTOR DENSITY AT 0 – 4% ABOVE OPTIMUM MOISTURE CONTENT. FREQUENCY OF TESTING SHALL NOT EXCEED EVERY 300 LINEAR FEET PER 2.0' OF LIFT UNTIL FINAL GRADE, STARTING AT 2.0' ABOVE NATURAL/SOUND GRADE TO TOP OF SUBGRADE. ALL STREET, ALLEY, AND FIRE LANE SUBGRADE SHALL BE COMPACTED TO NO LESS THAN 95% OF STANDARD PROCTOR DENSITY AT 0 – 4% ABOVE OPTIMUM MOISTURE CONTENT. FREQUENCY OF TESTS SHALL NOT EXCEED EVERY 300 LINEAR FEET OF SUBGRADE, ALTERNATING FROM LEFT QUARTER POINT TO CENTER LINE TO RIGHT QUARTER POINT. VERIFICATION OF LIME DEPTH, TESTING FOR SUBGRADE GRADATIONS & PULVERIZATIONS, AND PLASTICITY INDICES OF THE SOIL SHALL ALSO BE CONDUCTED; THE FREQUENCY OF THIS TESTING SHALL BE AS PREVIOUSLY MENTIONED. ALL TESTING OF MATERIALS REQUIRED FOR THE CONSTRUCTION OF ANY STREET, ALLEY OR FIRE LANE SHALL BE PERFORMED BY AN APPROVED AGENCY FOR TESTING MATERIALS. THE NOMINATION OF THE TESTING LABORATORY AND THE PAYMENT OF SUCH TESTING SERVICES SHALL BE MADE BY THE CONTRACTOR. THE ENGINEER SHALL APPROVE THE LABORATORY NOMINATED TO DO THE TESTING OF MATERIALS. IT SHALL BE THE CONTRACTOR'S RESPONSIBILITY TO SHOW BY STANDARD TESTING PROCEDURES THAT THE WORK CONSTRUCTED DOES MEET THE REQUIREMENTS OF THE TOWN'S SPECIFICATIONS.

3. ANY EXISTING PAVEMENT, CURBS, AND/OR SIDEWALK DAMAGED OR REMOVED BY THE CONTRACTOR ARE TO BE REPAIRED BY THE CONTRACTOR TO AT LEAST THE PREEXISTING CONDITION AT HIS EXPENSE BEFORE ACCEPTANCE OF THE WORK.

4. TRAFFIC CONTROLS DURING CONSTRUCTION TO BE CONTRACTOR'S RESPONSIBILITY AND INSTALLED IN ACCORDANCE WITH THE MANUAL ON UNIFORM TRAFFIC CONTROL DEVICES.

5. REPLACE EXISTING ROADWAY THAT IS CUT BY PIPE TRENCHES WITH SIMILAR ROADWAY.

6. MAINTAIN ALL MANHOLE FRAMES AND COVERS TO BELOW PAVEMENT SUBGRADE ELEVATION UNTIL PLACEMENT OF PAVEMENT BASE HAS BEEN COMPLETED. RAISE MANHOLE FRAMES AND COVERS TO FINISH PAVEMENT GRADES WHEN BASE IS COMPLETE.

7. MINIMUM DESIGN REQUIREMENTS: ALL STREET, ALLEY, PARKING LOT, AND FIRE LANE PAVING SHALL BE DESIGNED AND PERMITTED THROUGH THE TOWN TO HAVE A MINIMUM COMPRESSIVE STRENGTH OF 3500 PSI AT TWENTY–EIGHT (28) DAYS WITH A MINIMUM OF FIVE AND ONE HALF (5 & 1/2) SACKS OF CEMENT AS VERIFIED BY TESTING IN AN APPROVED LABORATORY. TWO BATCH DESIGNS SHALL BE SUBMITTED TO THE TOWN CONSTRUCTION ENGINEER FOR APPROVAL: ONE FOR MACHINE WORK AND ONE FOR HAND WORK. ALL BATCH DESIGNS MUST BE SIGNED BY THE TESTING LABORATORY AND INCLUDE ALL DOCUMENTATION, SUCH AS RESULTS OF FIELD TRIAL TESTING. IF APPLICABLE, ALL BATCH DESIGNS SHALL SPECIFY AN APPROPRIATE SULFATE RESISTANT CEMENT OR EQUIVALENT. SLUMP SHALL BE 1 – 3 INCHES FOR ALL MACHINE WORK AND 2 – 4 INCHES FOR ALL HAND WORK. STREETS (DEPENDING ON CLASSIFICATION), PARKING LOTS, AND FIRE LANES SHALL HAVE A MINIMUM THICKNESS OF SIX (6) INCHES; ALLEYS SHALL HAVE A MINIMUM THICKNESS OF 8"–5"–8". UPON COMPLETION OF CONSTRUCTION, ALL STREETS AND FIRE LANES SHALL BE CORED FOR DEPTH (2" CORES) AT A SPACING OF 300 FT MAXIMUM, ALTERNATING FROM LEFT QUARTER POINT TO CENTER LINE TO RIGHT QUARTER POINT. ALLEYS SHALL BE CORED FOR DEPTH (2" CORES) AT A SPACING OF 300 FT MAXIMUM ALONG THE CENTER LINE. PAVEMENT OF A THICKNESS LESS THAN THE THICKNESS SHOWN ON THE PLANS BY MORE THAN ONE–QUARTER (1/4) INCH BUT LESS THAN THREE–QUARTER (3/4) INCH WILL BE CONSIDERED DEFICIENT. THE CONTRACTOR SHALL PAY TO THE TOWN TWO (2) TIMES THE UNIT BID PRICE PER SQUARE YARD FOR THE AREA DETERMINED TO BE DEFICIENT IN THICKNESS AS DEFINED ABOVE. PAVEMENT DEFICIENT IN THICKNESS BY MORE THAN THREE–QUARTER (3/4) INCH SHALL BE REMOVED AND REPLACED COMPLETELY. THE DEFICIENT AREA SHALL BE CORED IMMEDIATELY ON TEN (10) FOOT CENTERS OR ONE (1) PER PANEL TO BE PROVED OUT. ALL STREETS, ALLEYS, PARKING LOTS, AND FIRE LANES WILL REQUIRE CYLINDERS TO BE MADE FOR STRENGTH TESTS BY THE APPROVED LABORATORY. SAMPLES FOR STRENGTH TESTS OF EACH CLASS OF CONCRETE PLACED EACH DAY SHALL BE TAKEN BY AN APPROVED LABORATORY NOT LESS THAN ONCE A DAY, NOR LESS THAN ONCE FOR EACH 100–150 CU YD OF CONCRETE. FOUR (4) CYLINDERS SHALL BE MADE: ONE SHALL BE BROKEN AT 7 DAYS, TWO (2) SHALL BE BROKEN AT TWENTY–EIGHT (28) DAYS, AND ONE SHALL BE HELD IN CASE OF DAMAGE OF ANY OF THE OTHER THREE (3). THE AVERAGE STRENGTH OF TWO (2) CYLINDERS FROM THE SAME SAMPLE, TESTED AT TWENTY–EIGHT (28) DAYS IS REQUIRED FOR EACH STRENGTH TEST; ANY STRENGTH TEST BEYOND TWENTY–EIGHT (28) DAYS IS UNACCEPTABLE. IF THE TWENTY–EIGHT (28) DAY DESIGN STRENGTH IS NOT REACHED UPON STRENGTH TESTING THE CYLINDERS, THE DEFICIENT AREA SHALL BE CORED IMMEDIATELY BE ON TEN (10) FOOT CENTERS OR ONE PER PANEL TO BE PROVED OUT. FOR ANY AREAS DEFICIENT IN STRENGTH BY NOT MORE THAN 500 PSI, THE CONTRACTOR SHALL PAY TO THE TOWN ONE (1) TIME THE UNIT BID PRICE PER SQUARE YARD FOR THE AREA DETERMINED TO BE DEFICIENT IN STRENGTH. FOR ANY AREAS DEFICIENT IN STRENGTH BY MORE THAN 500 PSI BUT NOT MORE THAN 1000 PSI, THE CONTRACTOR SHALL PAY TO THE TOWN TWO (2) TIMES THE UNIT BID PRICE PER SQUARE YARD FOR THE AREA DETERMINED TO BE DEFICIENT IN STRENGTH. PAVEMENT DEFICIENT IN STRENGTH BY MORE THAN 1000 PSI SHALL BE REMOVED AND REPLACED COMPLETELY. NO MORE THAN THREE (3) – FOUR (4) INCH CORES SHALL BE EXTRACTED PER PANEL WITHOUT PRIOR TOWN APPROVAL. A REBAR DETECTOR SHALL BE USED TO ENSURE THAT THE CORED AREAS ARE CLEAR OF ANY REBAR. ALL CORING AND ADDITIONAL LABORATORY TESTING SHALL BE AT THE EXPENSE OF THE CONTRACTOR. THE WIDTH TO BE CONSIDERED FOR ANY DEFICIENCIES SHALL BE THE FULL WIDTH OF THE PAVEMENT.

8. ANY SECTION OF ALL EXISTING PUBLIC OR PRIVATE STREETS, ALLEYS, OR FIRE LANES SHALL BE REPLACED WITHIN SEVENTY TWO (72) HOURS OF REMOVAL.

9. ALL REINFORCING BARS SHALL CONFORM TO ASTM A–615/A 615M, GRADE 60.

10. ALL CONCRETE AND REINFORCING STEEL SHALL CONFORM TO CURRENT A.C.I. CODE.

11. ALL WALL STEEL SHALL HAVE A MINIMUM CONCRETE COVER OF 2". SLAB REINFORCING TO HAVE A MINIMUM CONCRETE COVER OF 2" ON TOP AND 3" ON BOTTOM.

12. ALL BAR SPLICES, CORNER DOWELS, AND JOINT DOWELS SHALL HAVE A MINIMUM 40 DIAMETERS, OR 30", WHICHEVER IS GREATER.

13. JOINT AND CORNER DOWELS DESIGNATED AS "EXTRA LENGTH" SHALL HAVE A MINIMUM LAP LENGTH OF 80 BAR DIAMETERS OR 60", WHICHEVER IS GREATER, UNLESS OTHERWISE DIMENSIONED.

14. ALL EXPOSED CORNERS SHALL BE CHAMFERED 3/4" x 3/4".

15. NO HORIZONTAL CONSTRUCTION JOINTS WILL BE PERMITTED, UNLESS OTHERWISE NOTED. WALL FORMING AND CONCRETE PLACEMENT PLAN, TO ALLOW FOR VERTICAL CONSTRUCTION JOINTS, SHALL BE PREPARED AND SUBMITTED TO THE ENGINEER FOR APPROVAL. ALL VERTICAL CONSTRUCTION JOINTS TO INCLUDE STANDARD KEYWAY AND WATERSTOP.

DETOURS, BARRICADES, WARNING SIGNS, ETC.

1. TRAFFIC MUST BE HANDLED THROUGHOUT THE PROJECT DURING CONSTRUCTION. IT SHALL BE THE RESPONSIBILITY OF THE CONTRACTOR TO PROVIDE FOR THE SAFE AND COMFORTABLE PASSAGE OF TRAFFIC WITH MINIMAL INCONVENIENCE TO THE PUBLIC AT ALL TIMES. TRAFFIC LANES SHALL BE ENTIRELY OPEN TO TRAFFIC EACH NIGHT AND NO EQUIPMENT SHALL BE LEFT IN A POSITION OVERNIGHT THAT WILL ENDANGER TRAFFIC.

2. A FLAGGER SHALL BE STATIONED WHERE ANY EQUIPMENT IS WORKING ON THE ROAD OR WHERE ANY OTHER HAZARDS DUE TO CONSTRUCTION OPERATIONS EXIST OR AS DIRECTED BY THE ENGINEER.

3. THE CONTRACTOR SHALL MAINTAIN ACCESS TO ALL ADJACENT PROPERTIES THROUGHOUT ALL PHASES OF CONSTRUCTION. ADEQUACY OF ACCESS WILL BE AT THE DISCRETION OF THE ENGINEER. SAFE ENTRANCE AND EXIT TO ALL DRIVEWAYS SHALL BE PROVIDED WITH A MINIMUM OF INCONVENIENCE.

4. THE CONTRACTOR SHALL NOT STORE ANY CONSTRUCTION MATERIAL OR EQUIPMENT AT ANY LOCATION THAT WILL CONSTITUTE A HAZARD AND WILL ENDANGER TRAFFIC.

5. THE CONTRACTOR SHALL NOTIFY THE OWNER OF IMPENDING/UPCOMING LANE CLOSURES AS EARLY AS FIVE WORKING DAYS BUT NO LATER THAN 48 HOURS IN ADVANCE OF LANE CLOSURES.

6. FOR THIS PROJECT, UNLESS OTHERWISE NOTED IN THE PLANS AND/OR AS DIRECTED BY THE ENGINEER, NO LANE CLOSURES SHALL BE ALLOWED OTHER THAN THOSE IN THE TRAFFIC CONTROL PLAN.

7. THE CONTRACTOR MAY PROPOSE/RECOMMEND MODIFICATIONS TO THE SEQUENCE OF WORK FOR CONSIDERATION BY THE ENGINEER. ANY MAJOR RECOMMENDED MODIFICATION BY THE CONTRACTOR SHALL INCLUDE ANY CHANGES TO THE VARIOUS PAY ITEMS, IMPACT TO TRAFFIC, EFFECT OF OVERALL PROJECT IN TIME AND COST, ETC. THE CONTRACTOR SHALL NOT PROCEED WITH ANY CONSTRUCTION OPERATIONS BASED ON A REVISED PHASE/SEQUENCE UNTIL HE/SHE OBTAINS WRITTEN APPROVAL FROM THE ENGINEER. IF AT ANY TIME DURING CONSTRUCTION THE CONTRACTOR'S PROPOSED PLAN OF OPERATION FOR HANDLING TRAFFIC DOES NOT PROVIDE SAFE AND COMFORTABLE MOVEMENT, THE CONTRACTOR SHALL IMMEDIATELY CHANGE HIS OPERATION TO CORRECT THE UNSATISFACTORY CONDITION.

8. THE CONTRACTOR SHALL INSTALL AND MAINTAIN AN ADEQUATE NUMBER OF BARRICADES, WARNING AND DIRECTIONAL SIGNS TO DELINEATE TRAFFIC FOR ANY DETOURS.

9. ALL CONSTRUCTION TRAFFIC SHALL BE REGULATED SO AS TO CAUSE A MINIMUM OF INCONVENIENCE TO THE TRAVELING PUBLIC. AT POINTS WHERE IT IS NECESSARY FOR TRUCKS TO STOP AND UNLOAD, WARNING SIGNS AND FLAGGERS SHALL BE PROVIDED AS NECESSARY TO ADEQUATELY PROTECT TRAVEL.

10. ALL BARRICADES, SIGNS, WARNING LIGHTS, ETC. SHALL BE ACCORDING TO THE TEXAS MANUAL OF UNIFORM TRAFFIC CONTROL DEVICES.

11. THE CONTRACTOR MAY, WITH THE APPROVAL OF AND AS DIRECTED BY THE ENGINEER, BE REQUIRED TO FURNISH ADDITIONAL SIGNS AND BARRICADES TO THOSE INDICATED ON THE PLANS TO MAINTAIN THE SAFE PASSAGE OF TRAFFIC THROUGHOUT THE CONSTRUCTION SITE PARTICULARLY IN THOSE AREAS OF IMMEDIATE WORK.

12. UPON COMPLETION OF THE WORK AND BEFORE FINAL ACCEPTANCE IS MADE, THE CONTRACTOR SHALL SHAPE AND FINISH SUCH PORTIONS OF THE RIGHT–OF–WAY AS MAY HAVE BEEN DISTURBED IN MAKING THE ABOVE PROVISIONS FOR TRAFFIC AND WILL BE REQUIRED TO LEAVE THE ENTIRE RIGHT–OF–WAY IN A SMOOTH, NEAT AND SIGHTLY CONDITION.

13. ALL WORK AND MATERIALS REQUIRED BY THESE PROVISIONS WILL NOT BE PAID FOR DIRECTLY, BUT WILL BE CONSIDERED SUBSIDIARY TO THE VARIOUS BID ITEMS OF THE CONTRACT, UNLESS OTHERWISE INDICATED IN THE PLANS OR SPECIFICATIONS.

14. CONTRACTOR SHALL HAVE A COMPANY REPRESENTATIVE CERTIFIED IN FLAGGER TRAINING APPROVED BY TXDOT

15. THE CONTRACTOR IS FULLY RESPONSIBLE FOR THE TRAFFIC CONTROL AND WILL BE RESPONSIBLE FOR FURNISHING ALL TRAFFIC CONTROL DEVICES AND FLAGGERS. THE CONSTRUCTION METHODS SHALL BE CONDUCTED TO PROVIDE THE LEAST POSSIBLE INTERFERENCE TO TRAFFIC SO AS TO PERMIT THE CONTINUOUS MOVEMENT OF TRAFFIC IN ALL ALLOWABLE DIRECTIONS AT ALL TIMES.

16. THE CONTRACTOR SHALL PROVIDE FOR THE PASSAGE OF TRAFFIC THROUGH THE PROJECT WITH SIGNS, LIGHTS AND BARRICADES IN ACCORDANCE WITH THE TEXAS MANUAL ON UNIFORM TRAFFIC CONTROL DEVICES AS REQUIRED FOR MAINTENANCE ACTIVITIES AND TO THE SATISFACTION OF THE ENGINEER.

17. LANE CLOSURES WILL NOT BE ALLOWED UNLESS PRIOR APPROVAL IS GIVEN BY THE ENGINEER. IF LANE CLOSURES ARE APPROVED, IT IS THE CONTRACTOR'S RESPONSIBILITY TO NOTIFY THE OWNER 48 HOURS IN ADVANCE OF THE CLOSURE.

STORM SEWER SYSTEM

1. ALL STORM SEWER PIPE, BOX CULVERTS, AND OTHER STRUCTURES IN RIGHT OF WAY OR FIRE LANES SHALL BE REINFORCED CONCRETE AS PER TOWN SPECIFICATIONS AND SHALL BE LAID ON A MINIMUM OF A COMPACTED CRUSHED STONE OR PEA GRAVEL CUSHION, SIX INCHES THICK BELOW THE BOTTOM OF THE PIPE SHELL UNLESS OTHERWISE APPROVED BY THE TOWN. THE INITIAL BACKFILL OF SELECT MATERIAL OR FINE GRANULAR SHALL BE REQUIRED TO A MINIMUM OF THE SPRING LINE OF THE PIPE UNLESS OTHERWISE APPROVED BY THE TOWN.

2. DENSITY TESTING REQUIREMENTS: FREQUENCY OF TRENCH COMPACTION TESTS SHALL NOT BE LESS THEN ONE EVERY 300 LINEAR FEET OF PIPE PER 2.0' OF LIFT UNTIL FINAL GRADE, STARTING AT 2.0' ABOVE TOP OF PIPE. EVERY OTHER LATERAL; STUBOUT THAT CROSSES THE EXISTING OR PROPOSED STREET, ALLEY, OR FIRE LANE SUBGRADE; INLET; AND JUNCTION BOX WILL RECEIVE A DENSITY TEST EVERY LIFT. ALL DITCHES SHALL BE MECHANICALLY TAMPED AND COMPACTED TO 95% OF STANDARD PROCTOR DENSITY AT 0 – 4% ABOVE OPTIMUM MOISTURE. WATER JETTING IS NOT PERMITTED.

3. THE JOINTS SHALL BE CONSTRUCTED AND JOINTED TOGETHER IN SUCH A MANNER THAT NO SPILL THROUGH OF BACKFILL WILL OCCUR. THIS INCLUDES THE LIFT HOLES USED IN CERTAIN PIPE OR BOX SIZES. APPROVED JOINT MATERIALS ARE COLD APPLIED, PLASTIC ASPHALT JOINT COMPOUND; RUBBER GASKETS; AND COLD APPLIED, PREFORMED PLASTIC GASKETS.

4. STORM DRAINAGE INLETS SHALL BE AS INDICATED ON THE APPROVED CONSTRUCTION PLANS. FOR SECONDARY AND MAJOR STREET INTERSECTIONS, A RECESSED TYPE INLET WILL BE REQUIRED. FOR INDUSTRIAL AND RESIDENTIAL STREETS, A CURB LINE INLET WILL BE REQUIRED UNLESS OTHERWISE APPROVED. A ROUND MANHOLE COVER WITH LOCKING DEVICE SHALL BE PLACED ON ALL INLET TOPS. THE TOP SHALL BE PLACED NEAR THE OUTLET PIPE. ALL INLETS SHALL HAVE A MINIMUM COMPRESSIVE STRENGTH OF 4000 PSI AT 28 DAYS.

5. THE CONTRACTOR SHALL BE RESPONSIBLE FOR PROVIDING "AS–RECORDED" PLANS TO THE ENGINEER OF RECORD SHOWING THE LOCATION OF ALL DRAINAGE STRUCTURES. THIS INFORMATION SHALL BE PLACED ON THE ENGINEERING PLANS AND MARKED "RECORD DRAWING" PLANS ALONG WITH THE DATE AND THE NAME OF THE CONTRACTOR BY THE ENGINEER OF RECORD. COPIES OF THESE "RECORD DRAWING" PLANS SHALL BE FURNISHED TO THE TOWN ON MYLARS, BLACKLINE PRINTS, AND ELECTRONICALLY AS REQUIRED UNDER THE TOWN'S "FINAL ACCEPTANCE CHECKLIST."

6. THE CONTRACTOR SHALL FURNISH A MAINTENANCE BOND IN THE AMOUNT OF 10 % (TEN PERCENT) OF THE TOTAL CONTRACT PRICE TO THE TOWN TO RUN TWO (2) YEARS FROM THE DATE OF FINAL ACCEPTANCE OF THE SYSTEM BY THE TOWN.

7. ALL STORM SEWER OUTFALLS THAT DRAIN TO LEWISVILLE LAKE SHALL INCLUDE A DEBRIS SEPARATOR.

NO.	REVISION	DATE

DESIGN BY:	TRC
DRAWN BY:	TRC
CHECKED BY:	TRC
SCALE:	NONE
JOB NUMBER:	–

TOWN OF LITTLE ELM, TEXAS
STANDARD DETAILS
GENERAL CONSTRUCTION NOTES 2 OF 3

LITTLEELM

SHEET
2 OF 21

MAY 2016

CONSTRUCTION
GENERAL NOTES

WATER SYSTEM NOTES

1. ALL WORK AND MATERIALS SHALL BE IN ACCORDANCE WITH THE TOWN'S STANDARD SPECIFICATIONS AND GENERAL DESIGN STANDARDS.

2. ALL TAPPING SLEEVES AND VALVES SHALL BE FULL BODY DUCTILE IRON. WITH PRIOR APPROVAL BY THE TOWN ENGINEER, STAINLESS STEEL SMITH BLAIR 623 MAY BE ALLOWED FOR CONNECTION TO EXISTING LINES TWENTY–INCH (20") OR LARGER.

3. VALVES SHALL BE MUELLER OR WATEROUS, RESILIENT SEATED, 150 PSI TEST.

4. FITTINGS SHALL BE OF THE MECHANICAL JOINT TYPE, FLANGED WHERE APPLICABLE, AND BE MANUFACTURED BY US PIPE, AMERICAN, OR OTHER AS APPROVED BY THE TOWN – CLASS 250. ALL FITTINGS SHALL BE RESTRAINED BY THE USE OF MEGA–LUGS OR APPROVED OTHER AND CONCRETE THRUST BLOCKING.

5. FIRE HYDRANTS SHALL BE MUELLER OR WATEROUS THREE–WAY STANDARD THREAD WITH VALVE IN LEAD OR APPROVED OTHER. ALL MAIN STEAMER NOZZLES SHALL HAVE A NOMINAL INSIDE DIAMETER OF FOUR INCHES (4"). ALL COMMERCIAL FIRE HYDRANTS ARE REQUIRED TO BE INSTALLED WITH 4½"–5" HYDRA–STORZ CONNECTIONS.

6. WATER LINES IN THE AREA OF STORM DRAIN INLETS SHALL BE CONSTRUCTED BEHIND THE INLET BY PULLING THE PIPE USING LONGITUDINAL BENDING IN ACCORDANCE WITH THE MANUFACTURER'S REQUIREMENTS. FITTINGS MAY BE USED IF BENDING IS IMPRACTICAL; CONSULT WITH THE TOWN'S CONSTRUCTION INSPECTOR.

7. WATER LINES CROSSING UNDER STORM DRAINS AND SANITARY SEWER LINES SHALL HAVE A MINIMUM OF EIGHTEEN INCHES (18") CLEARANCE BELOW STORM DRAINS AND TWENTY–FOUR INCHES (24") CLEARANCE BELOW SANITARY SEWER LINES OR OTHERWISE AS GOVERNED BY TEXAS COMMISSION ON ENVIRONMENTAL QUALITY (TCEQ) CHAPTER 290 REQUIREMENTS. PARALLEL WATER LINES SHALL BE AT LEAST NINE FEET (9') CLEAR HORIZONTALLY FROM SANITARY SEWER LINES AND MANHOLES. WHERE MINIMUM CLEARANCE CANNOT BE ACHIEVED, WATER LINES SHALL BE ENCASED SIX INCHES (6") AROUND IN CONCRETE TO TEN FEET (10') EITHER SIDE OF THE UTILITY CROSSING. WHERE WATER LINES CROSS CREEKS OR DITCHES THE WATER LINE SHALL BE PROTECTED BY CONCRETE ENCASEMENT AT LEAST TEN FEET (10') PAST THE EMBANKMENT SLOPE ON EACH SIDE.

8. WATER MAINS: ALL WATER MAINS SHALL HAVE A MINIMUM OF FORTY EIGHT (48") COVER OVER THE TOP OF THE PIPE. ALL NEW WATER MAINS SHALL BE PVC PIPE IN ACCORDANCE WITH THE FOLLOWING: C900 DR 14 FOR FOUR–INCH (4") TO SIX–INCH (6"), C900 DR 18 FOR EIGHT–INCH (8") TO TWELVE–INCH (12"), AND C905 DR 18 FOR OVER TWELVE–INCH (12"), ALL "BLUE" IN COLOR AS PER TOWN SPECIFICATIONS; THE PIPE SHALL BE LAID ON A MINIMUM EMBEDMENT (SEE STANDARD CONSTRUCTION DETAILS). WATER MAINS UP TO TWELVE INCHES (12") SHALL BE INSTALLED TWO FEET (2') BACK OF CURB; MAINS LARGER THAN TWELVE INCHES (12") SHALL BE INSTALLED AT LEAST THREE FEET (3') FROM THE BACK OF CURB DEPENDING UPON CONDITIONS. DETECTABLE METALLIC TAPE ("BLUE–CAUTION BURIED WATER BELOW" OR APPROVED OTHER) SHALL BE INSTALLED AFTER INITIAL BACKFILL ON APPROXIMATE CENTERLINE OF PIPE PRIOR TO FINAL BACKFILL ABOVE ALL PVC MAINS.

9. THE CONTRACTOR SHALL INSTALL FIRE HYDRANTS AT THE LOCATIONS SHOWN. A M.J. AND FLANGED TEE WITH A FLANGED END TO M.J. GATE VALVE IS REQUIRED SO THAT THE GATE VALVE IS ANCHORED TO THE MAIN.

10. ALL FIRE HYDRANTS SHALL BE PAINTED WITH TWO (2) COATS OF TNEMEC SERIES 530 OMNITHANI DIFFUSED ALUMINUM, SILVER PAINT (OR APPROVED EQUIVALENT) OVER ONE (1) SHOP COAT OF PAINT.

    FIRE HYDRANT CAPS AND BONNETS SHALL BE PAINTED WITH TWO (2) COATS ACCORDING TO NFPA 291, CHAPTER 3:

CLASS C LESS THAN 500 GPM	TNEMEC SERIES 2H–SC09 SAFETY RED
CLASS B LESS THAN 500–999 GPM	TNEMEC SERIES 2H–SC03 SAFETY ORANGE
CLASS A LESS THAN 1000–1499 GPM	TNEMEC SERIES 2H–SC07 SAFETY GREEN
CLASS AA LESS THAN 1500 GPM AND ABOVE	TNEMEC SERIES 2H–SC06 SAFETY BLUE

11. A CONCRETE PAD TWENTY–FOUR (24") SQUARE SHALL BE POURED AROUND ALL FIRE HYDRANTS AND VALVES. CONCRETE SHALL BE 3000 PSI, SIX–INCH (6") THICK WITH FOUR (4) #3 BARS.

12. ALL BOLTS AND NUTS USED WITH MECHANICAL JOINT FITTING SHALL BE "COR–TEN" STEEL OR APPROVED OTHER.

13. THE INSTALLATION OF A BLUE STEMSONITE (OR OTHER) MODEL 88–SSA FIRE HYDRANT MARKER WILL BE INSTALLED OPPOSITE FIRE HYDRANTS JUST OFF CENTER TO THE SIDE OF THE STREET ADJACENT TO THE HYDRANT.

14. POLYETHYLENE ENCASEMENT – THE CONTRACTOR SHALL FURNISH AND INSTALL POLYETHYLENE WRAP AROUND DUCTILE IRON PIPE, RELATED FITTINGS, AND VALVES. THIS WRAP SHALL BE AN 8 MIL. THICKNESS POLYTUBE. SEAMS AND OVERLAPS SHALL BE WRAPPED AND HELD IN PLACE BY TWO–INCH (2") WIDE PLASTIC BACKED ADHESIVE TAPE, POLYKEN 900 OR SCOTCHRAP NO. 50, OR AN APPROVED OTHER, WITH APPROXIMATE TWO–FOOT (2') LAPS ON THE POLYTUBE. THE WRAP ON THE BARREL OF THE PIPE SHALL BE LOOSE ENOUGH TO ALLOW THE FILM TO SHIFT WITH THE SOIL. THE WRAP SHALL BE INSTALLED WITHOUT BREAKS, TEARS, OR HOLES IN THE FILM. THE COST OF THE POLYETHYLENE TUBE WRAP AND COMPLETE INSTALLATION SHALL BE INCLUDED IN THE UNIT PRICE BID FOR THE FURNISHING AND THE INSTALLATION OF DUCTILE IRON PIPE, RELATED FITTINGS, AND VALVES.

15. VALVE BOXES SHALL BE FURNISHED AT THE REQUIRED LENGTH IN ORDER TO BE SET TO FINAL GRADE ON EACH GATE VALVE. AFTER THE FINAL CLEAN UP AND ALIGNMENT HAS BEEN COMPLETED, THE CONTRACTOR SHALL POUR A REINFORCED CONCRETE BLOCK 24" X 24" X 6" AROUND ALL VALVE BOXES SO THE FINISHED GRADE IS LEVEL WITH THE FINISHED PARKWAY. ALL VALVE STACK COMPONENTS SHALL BE CAST IRON. VALVE BOXES OVER FOUR FEET (4') DEEP WILL REQUIRE EXTENSIONS. ALL VALVES SHALL BE MARKED WITH A SAW ON THE CURB OR PAVEMENT WITH "V". THE "V" SHALL POINT TO THE LOCATION OF THE VALVE AS FOLLOWS: IF THE VALVE IS IN THE PAVING, THE "V" SHALL BE MARKED UPRIGHT; IF THE VALVE IS OUTSIDE THE PAVING, THE "V" SHALL BE MARKED UPSIDE DOWN.

16. THE CONTRACTOR SHALL COORDINATE OPERATION OF ALL EXISTING VALVES WITH THE TOWN. CONTACT THE CONSTRUCTION INSPECTOR IN THE TOWN'S ENGINEERING DEPARTMENT AT (972) 377–5556.

17. ALL WATER LINES SHALL BE PRESSURE TESTED TO 200 PSI FOR A THREE (3) HOUR CONTINUOUS PERIOD. LEAKAGE RATE SHALL NOT EXCEED TWENTY–FIVE (25) GALLONS PER INCH OF NOMINAL DIAMETER PER MILE OF PIPE OVER A TWENTY–FOUR (24) HOUR PERIOD. CONTRACTOR SHALL FLUSH AND STERILIZE LINES AND PROVE LINES TO BE FREE OF FECAL COLIFORM ORGANISMS BY OBTAINING SAMPLES FOR LABORATORY TESTS FOR CONTAMINATION. THE CONTRACTOR SHALL REFLUSH AND RESTERILIZE UNTIL ALL SAMPLES PROVE FREE FROM CONTAMINATION.

18. ALL RESIDENTIAL WATER SERVICES SHALL BE AS FOLLOWS:

    A. WATER SERVICES SHALL BE NORMALLY LOCATED AT TWO FOOT (2') OFF EVERY OTHER LOT LINE. A WATER METER BOX, AS APPROVED BY THE TOWN, WITH LOCK LID SHALL BE INSTALLED TWO FEET (2') BACK OF CURB LINE.
    B. MINIMUM ONE–INCH (1") METER AND ONE–INCH (1") TYPE K COPPER SERVICES ARE REQUIRED TO SERVE ALL RESIDENTIAL LOTS AND PATIO HOMES. FOR TOWN HOMES AND DUPLEXES, A MINIMUM THREE–QUARTER INCH (3/4") METER AND SERVICE SHALL BE PROVIDED TO EACH OF THE FAMILY UNITS. SAND EMBEDMENT SHALL BE USED AROUND THE PIPE AND CORPORATION STOP. SERVICE SADDLES SHALL BE BRASS BODY WITH DOUBLE BRONZE FLATTENED STRAPS (NO BANDED) – FORD, CAMBRIDGE, A.Y. MCDONALD, OR APPROVED OTHER.
    C. THE UTILITY CONTRACTOR SHALL INSTALL THE WATER SERVICES TO A POINT TWO (2) FEET BACK OF THE CURB LINE AT A DEPTH OF 12 INCHES. LINE SHALL BE CONTINUOUS WITH NO FITTINGS UNDER PAVING. THE METER BOX SHALL BE FURNISHED AND INSTALLED BY THE CONTRACTOR AFTER THE PAVING CONTRACTOR HAS COMPLETED THE FINAL GRADING IN BACK OF THE CURB. EACH SERVICE LOCATION WILL BE MARKED ON THE CURB WITH A SINGLE VERTICAL SAW MARK BY THE UTILITY CONTRACTOR AND TIED TO PROPERTY CORNERS ON THE "AS–RECORDED" PLANS.
    D. IF THERE IS A CURB, THE CURB SHALL BE SAWCUT WITH "I" AT THE POINT WHERE THE SERVICE PIPE PASSES THE CURB.

19. FOR NON–RESIDENTIAL WATER SERVICES, THE METER BOX SHALL BE FURNISHED AND INSTALLED BY THE CONTRACTOR AFTER THE PAVING CONTRACTOR HAS COMPLETED THE FINAL GRADING IN BACK OF THE CURB. METER BOXES/VAULTS SHALL BE LOCATED OUTSIDE OF PAVING. EACH SERVICE LOCATION WILL BE MARKED ON THE CURB OR PAVEMENT WITH A SINGLE VERTICAL SAW MARK BY THE UTILITY CONTRACTOR AND TIED TO PROPERTY CORNERS ON THE "AS–RECORDED" PLANS.

20. DENSITY TESTING REQUIREMENTS: FREQUENCY OF TRENCH COMPACTION TESTS SHALL NOT BE LESS THAN ONE (1) FOR ANY PIPE SECTION AND EVERY THREE HUNDRED LINEAR FEET (300') LINEAR FEET OF MAIN PIPE PER TWO FEET (2') OF LIFT UNTIL FINAL GRADE, STARTING AT TWO FEET (2') ABOVE THE TOP OF PIPE. WATER SERVICES ARE TO BE TESTED AT A RATE OF ONE (1) FOR EVERY SIX (6) SERVICES WHICH CROSS THE PROPOSED RIGHT OF WAY OR EVERY THREE HUNDRED LINEAR FEET (300') OF WATER SERVICE INSTALLED. EVERY OTHER FIRE HYDRANT LEAD THAT CROSS THE EXISTING OR PROPOSED STREET, ALLEY, OR FIRE LANE SUBGRADE SHALL ALSO RECEIVE AT LEAST ONE SET OF DENSITY TESTS. ALL DITCHES SHALL BE MECHANICALLY TAMPED AND COMPACTED TO NINETY–FIVE PERCENT (95%) STANDARD PROCTOR DENSITY AT ZERO PERCENT (0%) TO FOUR PERCENT (4%) ABOVE OPTIMUM MOISTURE. WATER JETTING IS NOT PERMITTED.

21. THE CONTRACTOR SHALL BE RESPONSIBLE FOR PROVIDING "AS–RECORDED" PLANS TO THE ENGINEER OF RECORD SHOWING THE LOCATION OF WATER SERVICES AND VALVES BY DISTANCES TO LOT LINES. THIS INFORMATION SHALL BE PLACED AND MARKED IN THE "RECORD DRAWING" PLANS ALONG WITH THE DATE AND THE NAME OF THE CONTRACTOR BY THE ENGINEER OF RECORD. COPIES OF THESE "RECORD DRAWING" PLANS SHALL BE FURNISHED TO THE TOWN ON MYLARS, BLACKLINE PRINTS, AND ELECTRONICALLY AS REQUIRED UNDER THE TOWN'S "FINAL ACCEPTANCE CHECKLIST."

22. THE CONTRACTOR SHALL FURNISH, PROGRAM, AND INSTALL PROGRAMMABLE 3M ELECTRONIC MARKER SYSTEM iD BALL MARKERS (1423–XR/iD BLUE) AT A MINIMUM EVERY 200 LINEAR FEET AND/OR AT THE INTERSECTION OF OTHER MAJOR UTILITIES, CHANGE IN LINE DIRECTION, SERVICE STUBS, ROAD CROSSINGS, AND TEES. AN INFORMATION LIST INCLUDING ID NUMBERS AND GPS LOCATION COORDINATES SHALL BE FURNISHED TO THE OWNER.

23. THE CONTRACTOR SHALL NOT EXCEED MANUFACTURER'S RECOMMENDATION FOR CURVATURE OF LINES AND/OR DEFLECTION OF PIPE JOINTS. INSTALL JOINTS AS REQUIRED.

24. THE CONTRACTOR SHALL PROVIDE FITTINGS, PLUGS, AND OTHER DEVICES FOR USE IN FILLING, FLUSHING, TESTING, ETC. (NO SEPARATE PAY).

25. THE CONTRACTOR SHALL PROVIDE ADEQUATE THRUST BLOCKING TO WITHSTAND TEST PRESSURES. (NO SEPARATE PAY).

26. MAINTAIN MINIMUM CLEARANCE OF THREE (3) FEET FROM EDGE OF STRUCTURES TO CLOSEST EDGE OF PIPELINE ADJACENT AND PARALLEL TO EDGE OF STRUCTURE, UNLESS OTHERWISE NOTED ON PLANS.

27. DI–ELECTRIC CONNECTIONS TO BE PREVENTED BY USE OF NON–CONDUCTIVE GASKETS BETWEEN DISSIMILAR PIPING MATERIALS.

28. REFERENCE SPECIFICATIONS FOR REQUIREMENTS ON REQUIRED SEPARATION DISTANCE BETWEEN SEWER AND WATER MAINS AND REQUIREMENTS IN THE EVENT THE SEPARATION DISTANCE CANNOT BE MET.

SANITARY SEWER SYSTEM

1. ALL SANITARY SEWER PIPES FOUR INCHES (4") TO FIFTEEN INCHES (15") NOMINAL SIZE SHALL BE PVC SDR 26 MEETING ASTM D3034. ALL SANITARY SEWER PIPES EIGHTEEN INCHES (18") AND LARGER NOMINAL SIZE SHALL BE PVC MEETING ASTM F679. ALL PIPES SHALL BE "GREEN" IN COLOR AS PER TOWN SPECIFICATIONS AND BE LAID ON A MINIMUM EMBEDMENT (SEE STANDARD CONSTRUCTION DETAILS). DETECTABLE METALLIC TAPE ("GREEN–CAUTION BURIED SEWER BELOW" OR APPROVED OTHER) SHALL BE INSTALLED AFTER INITIAL BACKFILL ON APPROXIMATE CENTERLINE OF PIPE PRIOR TO FINAL BACKFILL.

2. ALL SEWER MAINS SHALL BE A MINIMUM DIAMETER OF EIGHT INCHES (8") AND SHALL MAINTAIN A MINIMUM FLOW VELOCITY OF TWO (2) FEET PER SECOND.

3. ALL RESIDENTIAL SANITARY SEWER SERVICES SHALL BE A MINIMUM FOUR INCHES (4") IN DIAMETER AND EXTENDED TO A POINT TEN FEET (10') INSIDE THE PROPERTY LINE AT A MAXIMUM DEPTH OF FIVE FEET (5'). THE SERVICE SHALL THEN BE EXTENDED AT A FORTY–FIVE DEGREE (45°) ANGLE TO FOUR FEET (4') ABOVE THE FINISHED GRADE AND CAPPED. SEWER SERVICES SHALL BE LOCATED IN THE CENTER OF THE LOT.

4. DENSITY TESTING REQUIREMENTS: FREQUENCY OF TRENCH COMPACTION TESTS SHALL NOT BE LESS THAN ONE (1) FOR ANY PIPE SECTION AND EVERY THREE HUNDRED LINEAR FEET (300') OF MAIN PIPE PER TWO FEET (2') OF LIFT UNTIL FINAL GRADE, STARTING AT TWO FEET (2') ABOVE TOP OF PIPE. SEWER SERVICES ARE TO BE TESTED AT A RATE OF ONE (1) FOR EVERY SIX (6) SERVICES STAGGERED OR EVERY THREE HUNDRED LINEAR FEET (300') OF SEWER SERVICE INSTALLED. EACH SEWER MANHOLE WILL RECEIVE A DENSITY TEST EVERY TWO FEET (2') OF LIFT UNTIL FINAL GRADE, ALTERNATING AROUND ALL QUADRANTS. EVERY OTHER MAIN AND STUBOUT THAT CROSSES THE EXISTING OR PROPOSED STREET, ALLEY, OR FIRE LANE SUBGRADE SHALL ALSO RECEIVE AT LEAST ONE SET OF DENSITY TESTS. ALL DITCHES SHALL BE MECHANICALLY TAMPED AND COMPACTED TO NINETY–FIVE PERCENT (95%) STANDARD PROCTOR DENSITY AT ZERO PERCENT (0%) TO FOUR PERCENT (4%) ABOVE OPTIMUM MOISTURE. WATER JETTING IS NOT PERMITTED.

5. AFTER PAVING IS COMPLETED EACH SERVICE LOCATION WILL BE MARKED ON THE CURB WITH A TWO (2) PARALLEL VERTICAL SAW MARKS BY THE UTILITY CONTRACTOR AND TIED TO AT LEAST ONE (1) PROPERTY CORNER ON THE "AS–RECORDED" PLANS. ALL MANHOLES AND CLEANOUTS SHALL BE MARKED ON THE CURB OR PAVEMENT WITH "MH" OR "CO" AS APPLICABLE.

6. THE CONTRACTOR SHALL BE RESPONSIBLE FOR PROVIDING "AS–RECORDED" PLANS TO THE ENGINEER OF RECORD SHOWING THE LOCATION OF SEWER SERVICES BY DISTANCE TO THE LOT LINES OR PROPERTY LINES. THIS INFORMATION SHALL BE PLACED ON THE ENGINEERING PLANS AND MARKED "RECORD DRAWING" PLANS ALONG WITH THE DATE AND THE NAME OF THE CONTRACTOR BY THE ENGINEER OF RECORD. COPIES OF THESE "RECORD DRAWING" PLANS SHALL BE FURNISHED TO THE TOWN ON MYLARS, BLACKLINE PRINTS, AND ELECTRONICALLY AS REQUIRED UNDER THE TOWN'S "FINAL ACCEPTANCE CHECKLIST." TIES SHALL BE MADE BY DISTANCE MEASUREMENTS FOR ALL MANHOLES, CLEANOUTS AND SERVICES. TV INSPECTIONS, LOW PRESSURE AIR TESTING, VACUUM TESTING OF THE MANHOLES, AND DEFLECTION TESTING ARE REQUIRED ON ALL SEWER LINES. PRIOR TO PAVING, ALL RESIDENTIAL SANITARY SEWER SERVICES SHALL HAVE TV INSPECTIONS.

7. MANHOLES SHALL HAVE A 400# TRAFFIC BEARING FRAME AND COVER AND SHALL HAVE A MINIMUM COMPRESSIVE STRENGTH OF 4000 PSI AT TWENTY–EIGHT (28) DAYS.

8. THE CONTRACTOR SHALL FURNISH, PROGRAM, AND INSTALL PROGRAMMABLE 3M ELECTRONIC MARKER SYSTEM iD BALL MARKERS (1424–XR/iD GREEN) AT A MINIMUM EVERY 200 LINEAR FEET AND/OR AT THE INTERSECTION OF OTHER MAJOR UTILITIES, CHANGE IN LINE DIRECTION, SERVICE STUBS, ROAD CROSSINGS, AND TEES. AN INFORMATION LIST INCLUDING ID NUMBERS AND GPS LOCATION COORDINATES SHALL BE FURNISHED TO THE OWNER FOR SANITARY SEWER AND FORCE MAIN.

9. THE CONTRACTOR SHALL NOT EXCEED MANUFACTURER'S RECOMMENDATION FOR CURVATURE OF LINES AND/OR DEFLECTION OF PIPE JOINTS. INSTALL JOINTS AS REQUIRED.

10. THE CONTRACTOR SHALL PROVIDE FITTINGS, PLUGS, AND OTHER DEVICES FOR USE IN FILLING, FLUSHING, TESTING, ETC. (NO SEPARATE PAY).

11. THE CONTRACTOR SHALL PROVIDE ADEQUATE THRUST BLOCKING TO WITHSTAND TEST PRESSURES. (NO SEPARATE PAY).

12. PIPING DRAWINGS INDICATE INVERT ELEVATIONS FOR GRAVITY FLOW LINES. SLOPE PIPE UNIFORMLY BETWEEN ELEVATIONS SHOWN; NO VALLEYS OR PEAKS PERMITTED IN GRAVITY FLOW LINES. FOR OTHER PIPING, REFER TO DETAIL SHEETS FOR PIPE ELEVATIONS AT EACH STRUCTURE. SITE PIPING DRAWINGS DO NOT INDICATE VERTICAL BENDS AND TRANSITIONS. WHEN NECESSARY, MAKE VERTICAL TRANSITIONS OR FURNISH AND INSTALL VERTICAL BENDS AT NO EXTRA COST. DO NOT EXCEED MANUFACTURER'S RECOMMENDATIONS FOR CURVATURE OF LINES AND/OR DEFLECTION OF PIPE JOINTS.

13. MAINTAIN MINIMUM CLEARANCE OF THREE (3) FEET FROM EDGE OF STRUCTURES TO CLOSEST EDGE OF PIPELINE ADJACENT AND PARALLEL TO EDGE OF STRUCTURE, UNLESS OTHERWISE NOTED ON PLANS.

14. DI–ELECTRIC CONNECTIONS TO BE PREVENTED BY USE OF NON–CONDUCTIVE GASKETS BETWEEN DISSIMILAR PIPING MATERIALS.

NO.	REVISION	DATE

DESIGN BY:	TRC
DRAWN BY:	TRC
CHECKED BY:	TRC
SCALE:	NONE
JOB NUMBER:	–

TOWN OF LITTLE ELM, TEXAS
STANDARD DETAILS
GENERAL CONSTRUCTION NOTES 3 OF 3

LITTLEELM

SHEET 3 OF 21

MAY 2016

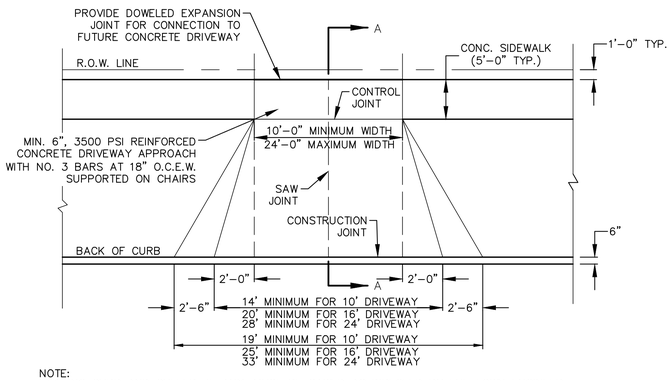

NOTE:
EXISTING CURB AND GUTTER, IF ANY, MUST BE SAWED AS DIRECTED BY THE TOWN ENGINEER. HORIZONTAL CURB CUT SHALL BE MADE AT AN ELEVATION OF 1/2" ABOVE THE EXISTING GUTTER WITH A MINIMUM LENGTH AS SHOWN. THE TRADITIONAL SAW CUT SHALL HAVE A RUN OF 2'-6" AND SHALL RISE TO MEET THE EXISTING TOP OF CURB. ALL EXPOSED EDGES SHALL BE GROUND TO A 1/4" RADIUS. SAW CUTTING SHALL BE PERFORMED WITH A RIDE-ON SAW EQUIPPED WITH A DIAMOND SAW BLADE.

PLAN

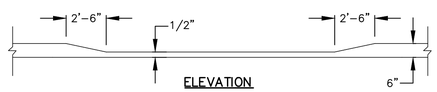

ELEVATION

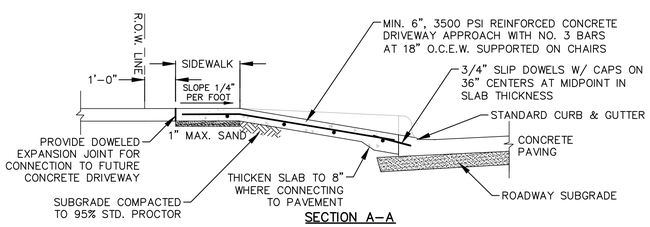

SECTION A–A

RESIDENTIAL APPROACH (CONCRETE PAVING)
N.T.S.

NOTE:

1. SIDEWALK SECTION THRU DRIVEWAY SHALL BE POURED SAME THICKNESS AS DRIVEWAY APPROACH. (EXISTING SIDEWALK, IF ANY, SHALL BE REMOVED AND REPLACED)

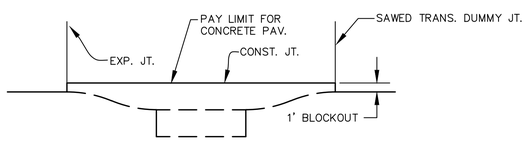

BLOCKOUT FOR RECESSED INLET
N.T.S.

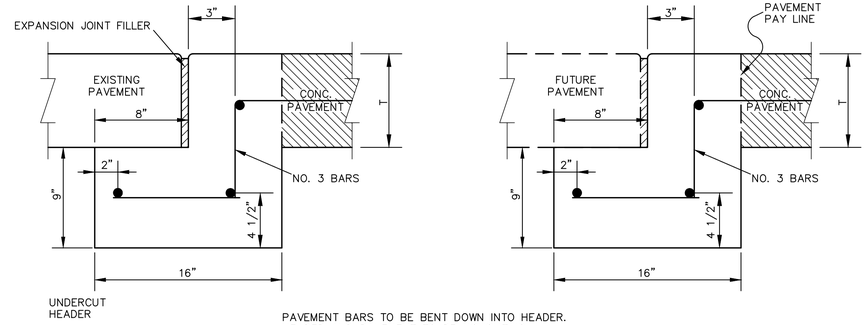

PAVEMENT BARS TO BE BENT DOWN INTO HEADER.
HEADER AND PAVEMENT TO BE MONOLITHIC.

STREET HEADER
N.T.S.

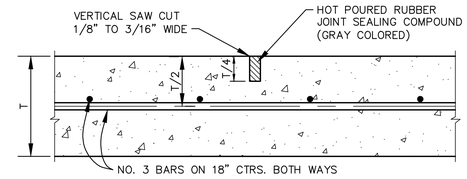

SAWED DUMMY JOINT
N.T.S.

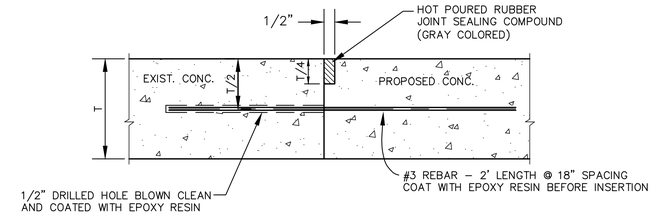

ANCHOR JOINT
N.T.S.

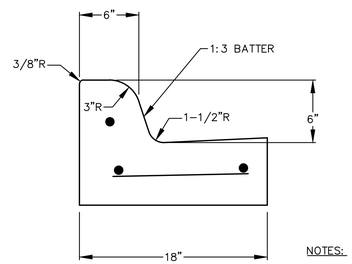

18" CURB & GUTTER
N.T.S.

NOTES:

1. INSTALL ANCHOR JT. WHEN CONNECTING TO EXISTING CONC. PAVEMENT. SEE DETAIL THIS SHEET.
2. REINFORCEMENT SHALL BE NO. 4 BARS UNLESS NOTED OTHERWISE.

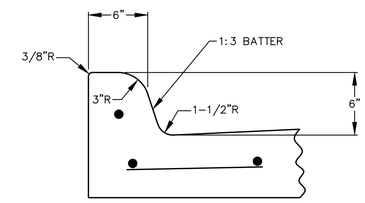

INTEGRAL CURB
N.T.S.

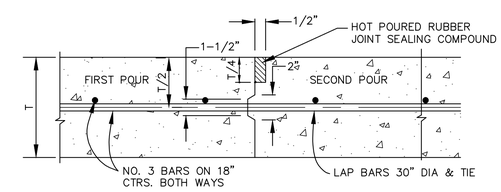

CONSTRUCTION JOINT FOR PAVEMENT
N.T.S.

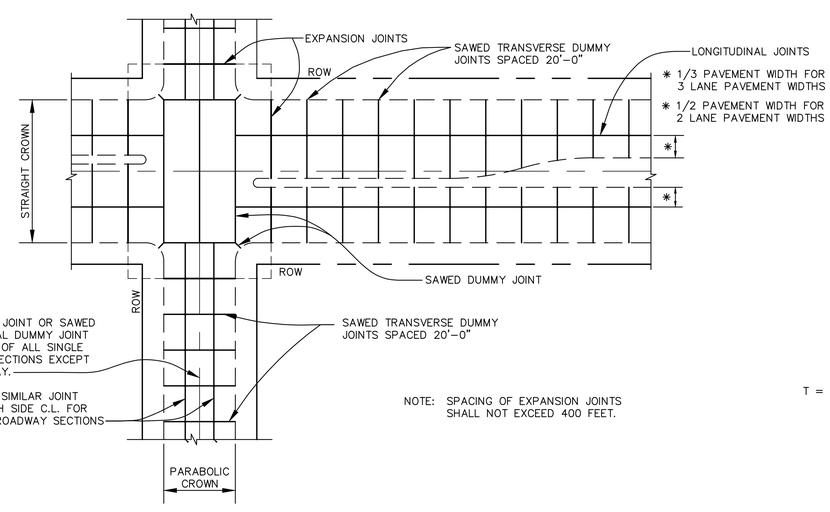

NOTE: SPACING OF EXPANSION JOINTS SHALL NOT EXCEED 400 FEET.

SPACING DIAGRAM FOR TRANSVERSE JOINTS
N.T.S.

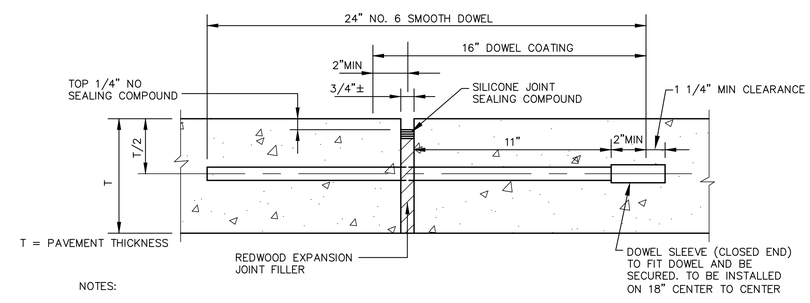

NOTES:

1. DOWELS AND REINFORCING BARS SHALL BE SUPPORTED BY CHAIRS OR OTHER DEVICES APPROVED BY TOWN ENGINEER.
2. JOINTS SHALL BE SPACED AT A MAXIMUM OF 400 FEET, LOCATED AT INTERSECTIONS.

TRANSVERSE EXPANSION JOINT
N.T.S.

DATE	REVISION	NO.	DESIGN BY: TRC	DRAWN BY: TRC	CHECKED BY: TRC	SCALE: NONE	JOB NUMBER: –

TOWN OF LITTLE ELM, TEXAS
STANDARD DETAILS
TYPICAL PAVING DETAILS

LITTLEELM

SHEET 4 OF 21

MAY 2016

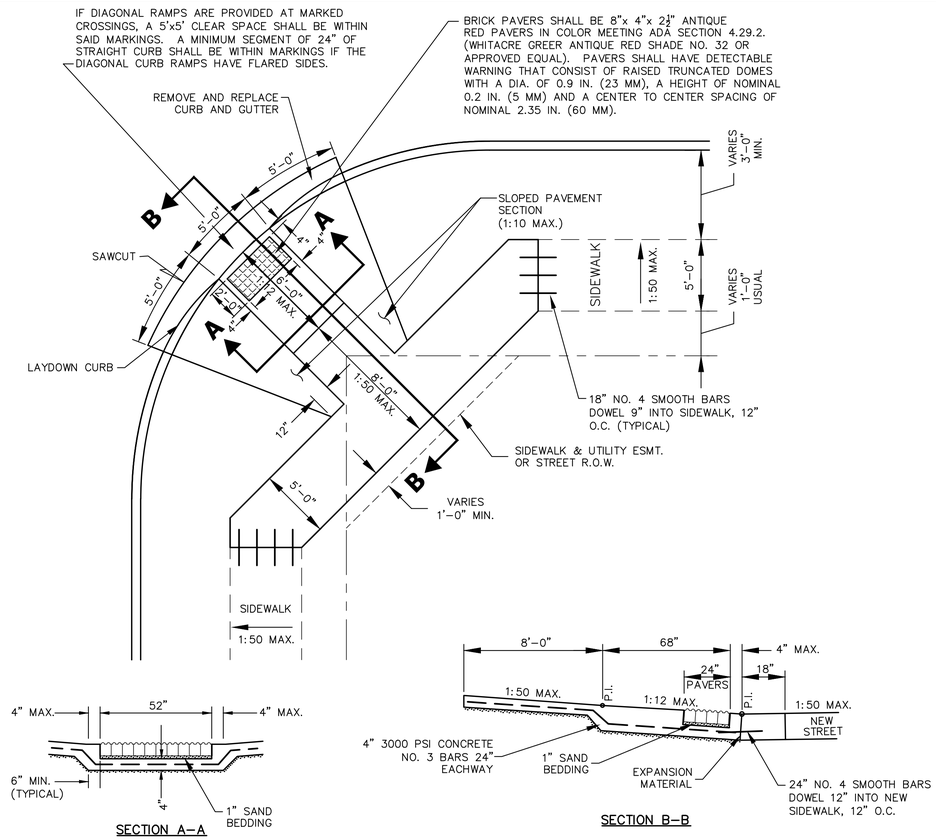

TYPE 1
TYPICAL BARRIER FREE RAMP AT AN INTERSECTION WITH R.O.W. CORNER CLIP
N.T.S.

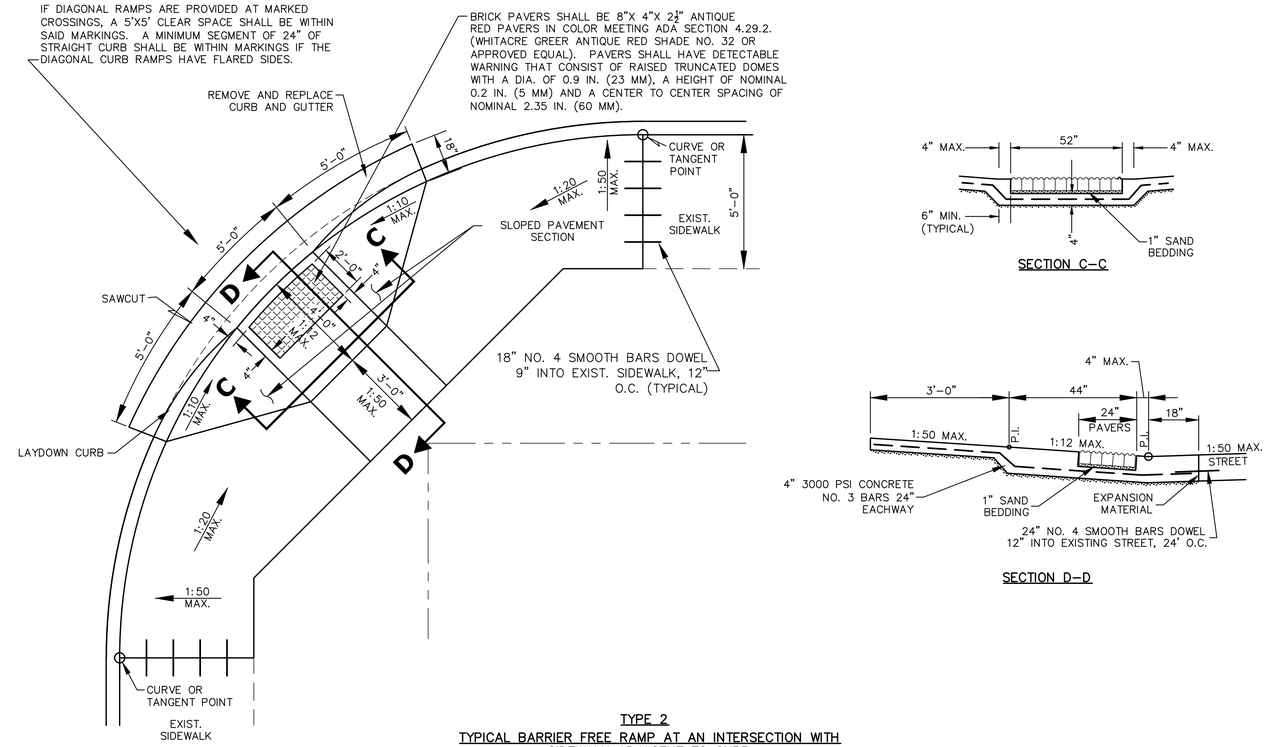

TYPE 2
TYPICAL BARRIER FREE RAMP AT AN INTERSECTION WITH SIDEWALK ADJACENT TO CURB
N.T.S.

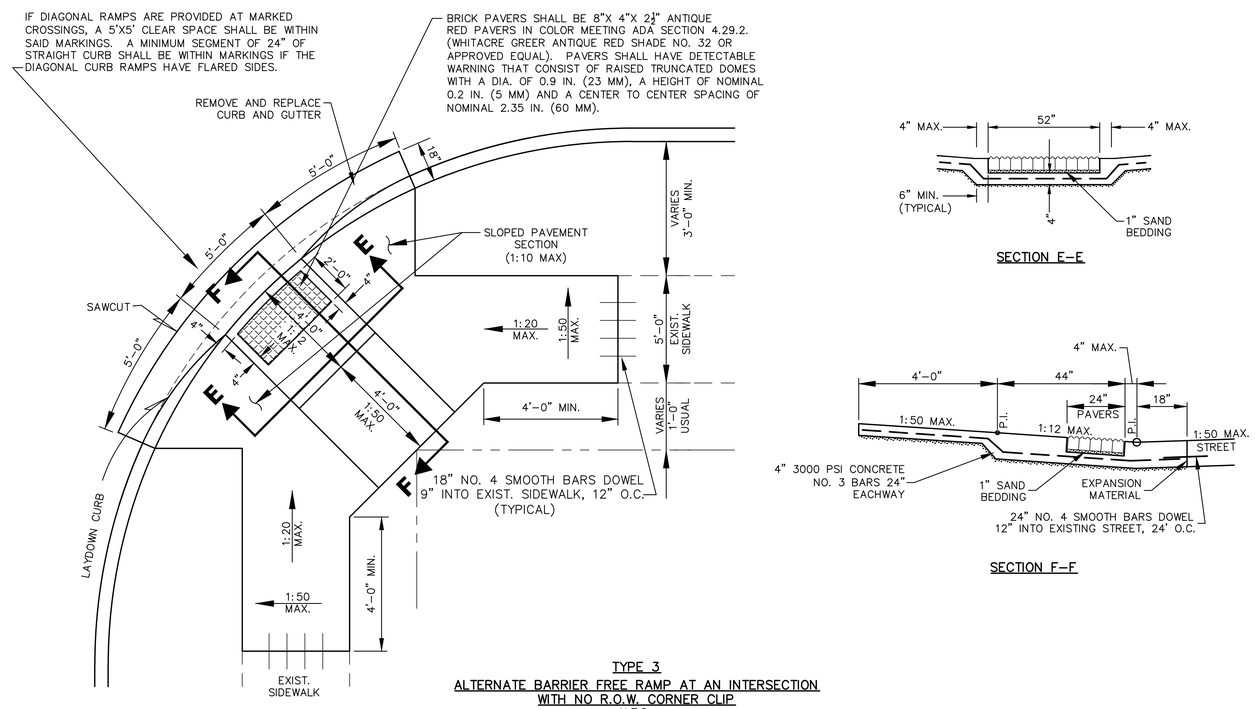

TYPE 3
ALTERNATE BARRIER FREE RAMP AT AN INTERSECTION WITH NO R.O.W. CORNER CLIP
N.T.S.

DATE	REVISION	NO.	

DESIGN BY:	TRC
DRAWN BY:	TRC
CHECKED BY:	TRC
SCALE:	NONE
JOB NUMBER:	-

TOWN OF LITTLE ELM, TEXAS
STANDARD DETAILS
TYPICAL BARRIER FREE RAMP DETAILS 1 OF 2

LITTLEELM

SHEET 5 OF 21

MAY 2016

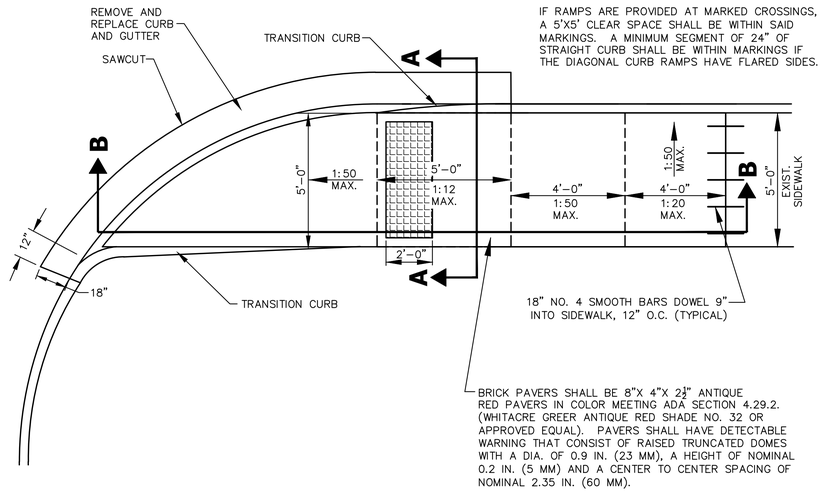

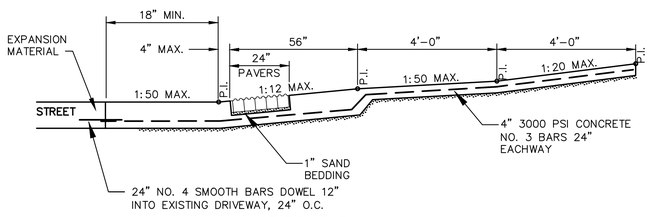

SECTION B–B

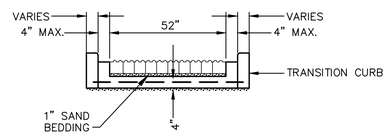

SECTION A–A

TYPE 4
TYPICAL BARRIER FREE RAMP
ON BACK OF CURB
N.T.S.

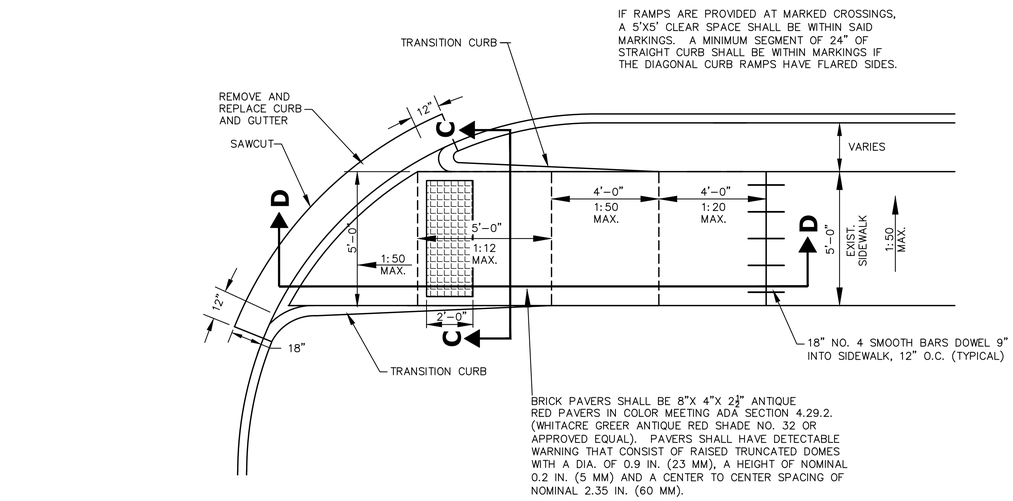

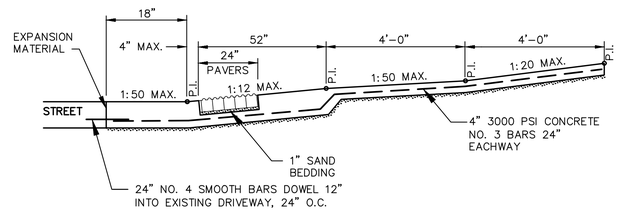

SECTION D–D

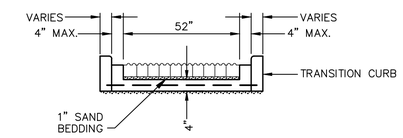

SECTION C–C

TYPE 5
TYPICAL BARRIER FREE RAMP
ON A RADIUS CURVE
N.T.S.

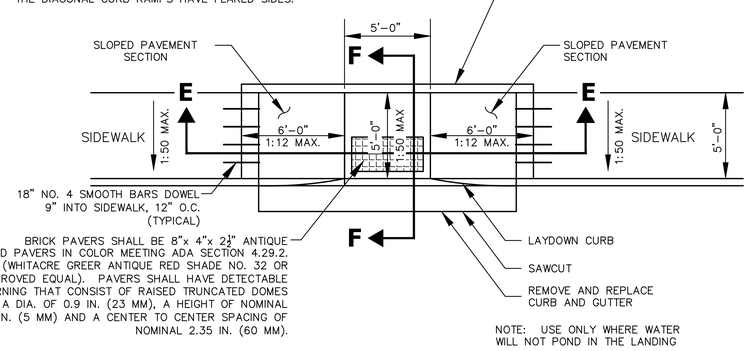

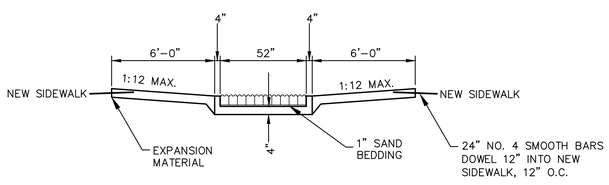

SECTION E–E

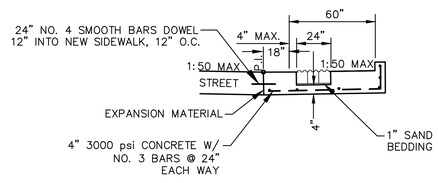

SECTION F–F

TYPE 6
TYPICAL BARRIER FREE PARALLEL CURB RAMP
N.T.S.

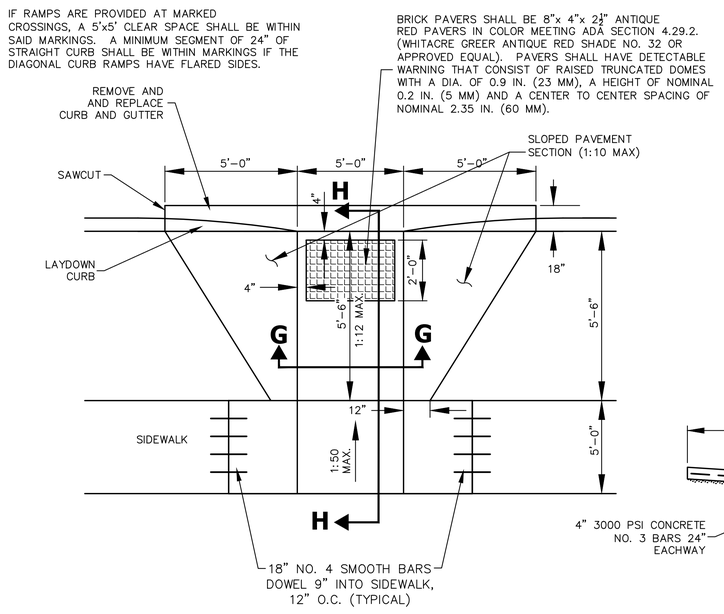

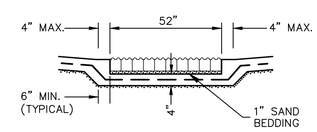

SECTION G–G

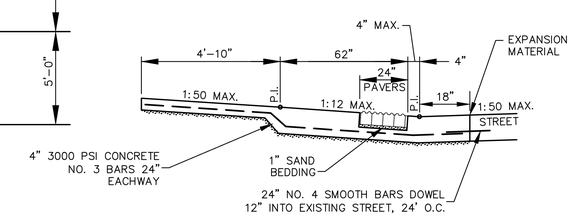

SECTION H–H

TYPE 7
TYPICAL BARRIER FREE RAMP AT MID-BLOCK LOCATION
N.T.S.

DATE	REVISION	NO.

DESIGN BY:	TRC
DRAWN BY:	TRC
CHECKED BY:	TRC
SCALE:	NONE
JOB NUMBER:	–

TOWN OF LITTLE ELM, TEXAS
STANDARD DETAILS
TYPICAL BARRIER FREE RAMP DETAILS 2 OF 2

LITTLEELM

SHEET
6 OF 21

MAY 2016

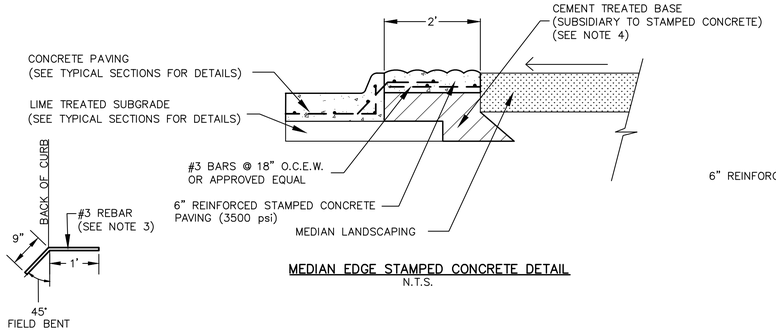

MEDIAN EDGE STAMPED CONCRETE DETAIL
N.T.S.

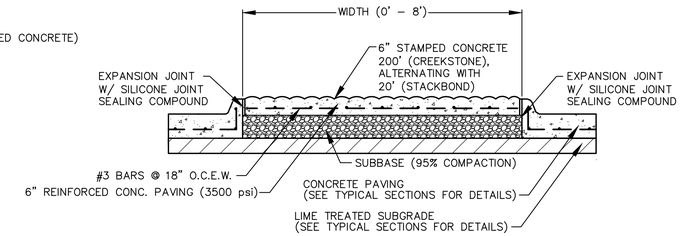

MEDIAN STAMPED CONCRETE DETAIL
N.T.S.

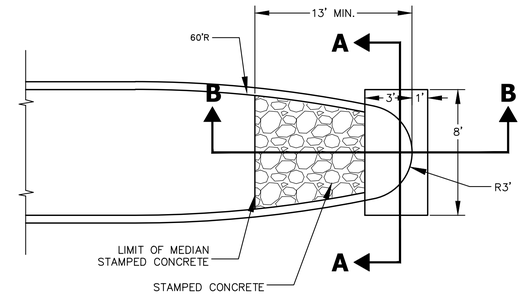

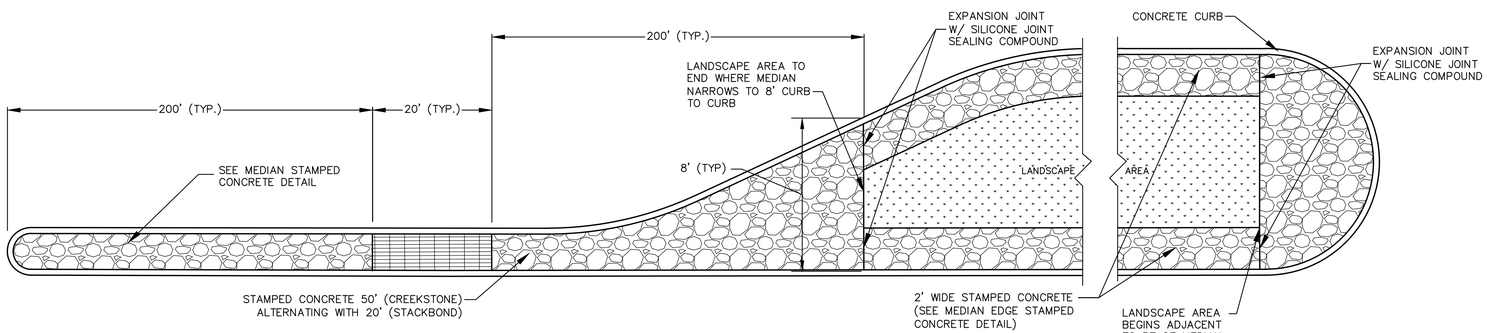

TYPICAL MEDIAN STAMPED CONCRETE DETAIL
N.T.S.

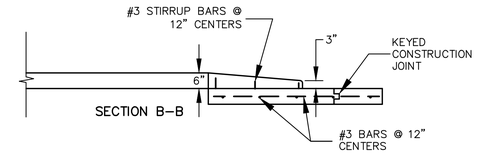

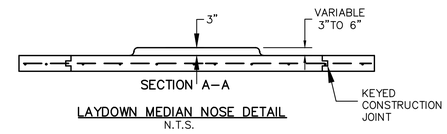

LAYDOWN MEDIAN NOSE DETAIL
N.T.S.

NOTES:

1. ROADWAY MEDIAN STAMPED CONCRETE.
   FIRST 50' OF PATTERN SHALL BE:
   PATTERN: BOMANITE – BOMACON CREEK STONE
   COLOR: LIGHT SAND COLOR HARDENER
   LIGHT BROWN (BC–2 CH–00135–60) RELEASE AGENT
   DARK WALNUT CHEMICAL STAIN (DILUTED TO ANTIQUE)
   AUBURN CHEMICAL STAIN (DILUTED TO ANTIQUE)
   PINE CHEMICAL STAIN (DILUTED TO ANTIQUE)
   ALTERNATING WITH 20' OF PATTERN SHALL BE:
   PATTERN: BOMANITE – STACKED BOND BRICK
   COLOR: RED CLAY (4D) INTEGRAL COLOR
   FOREST BROWN (BC–1 CH–00093–60) COLOR HARDENER
   FOREST BROWN (BC–1 CH–00093–60) RELEASE AGENT

   CROSSWALK STAMPED CONCRETE.
   PATTERN: BOMANITE – HERRINGBONE BRICK
   COLOR: THISTLE BROWN (4B) INTEGRAL COLOR
   LIGHT BROWN (BC–2 CH–00135–60) COLOR HARDENER
   LIGHT BROWN (BC–2 CH–00135–60) RELEASE AGENT
   BORDER/ACCENT STRIP OF PATTER SHALL BE:
   PATTERN: BOMANITE – STACKED BOND BRICK
   COLOR: RED CLAY (4D) INTEGRAL COLOR
   FOREST BROWN (BC–1 CH–00093–60) COLOR HARDENER
   FOREST BROWN (BC–1 CH–00093–60) RELEASE AGENT

   WELCOME MAT & WELCOME MAT STAMPED CONCRETE.
   FIELD OF PATTERN SHALL BE:
   PATTERN: BOMANITE – RUNNING BOND USED BRICK
   COLOR: INTEGRAL COLOR TO MATCH CARAMEL (BC–1 CH–00093–60)
   COLOR HARDENER
   CARAMEL (BC–1 CH–00093–60) COLOR HARDENER
   CARAMEL (BC–1 CH–00093–60) RELEASE AGENT
   PATTERN: BOMANITE – STACKED BOND BRICK
   COLOR: INTEGRAL COLOR TO MATCH FOREST BROWN (BC–1 CH–00093–60)
   COLOR HARDENER
   FOREST BROWN (BC–1 CH–00093–60) COLOR HARDENER
   FOREST BROWN (BC–1 CH–00093–60) RELEASE AGENT
2. CONTRACTOR TO PROVIDE 6'X6' MOCK–UP OF EACH PATTERN AND COLOR PRIOR TO CONSTUCTION, FOR TOWN APPROVAL.
3. IF THE #3 REBAR IS TO BE PLACED AS A DOWEL BAR AFTER THE CURB IS CONSTRUCTED, THE DOWEL BAR MUST BE EPOXIED INTO A ½ INCH MAXIMUM DIAMETER DRILLED HOLE IN THE CURB EVERY TWO FEET.
4. CROSS SLOPE IS TO BE DETERMINED IN THE FIELD, TO PROVIDE A ONE PERCENT MINIMUM SLOPE WITH SMOOTH TRANSITIONS TO CURB LINES. THE CROSS SLOPE IS TO BE SUBJECT TO THE ENGINEERS APPROVAL.
5. IN ADDITION TO THE REQUIREMENTS OF THE STANDARD SPECIFICATIONS, MEDIAN, AND CROSSWALK PAVEMENT SPECIFICATIONS SHALL BE IN ACCORDANCE WITH "BOMANITE CORPORATION" OR APPROVED EQUAL. THIS INCLUDES THEIR REQUIREMENTS FOR EXPANSION JOINTS, JOINT FILLERBOARD, WELDED WIRE FABRIC AND CONCRETE MIX.
6. ALL STAMPED CONCRETE SHALL BE INSTALLED IN ACCORDANCE WITH THE STANDARD SPECIFICATIONS OF "BOMANITE CORPORATION" OR APPROVED EQUAL. THE CONTRACTOR PERFORMING THE WORK MUST SUBMIT A LETTER FROM THE ABOVE TOOLING MANUFACTURER STATING THAT THE INSTALLER OF THE WORK IS LICENSED TO PERFORM THE SPECIFIED WORK.
7. ALL WORK PERFORMED MUST BE OF THE SAME MANUFACTURER AND ALL MATERIALS USED, INCLUDING CONCRETE MIX, MUST BE THE SAME FOR THE ENTIRE PROJECT. COLOR HARDENERS AND RELEASE AGENTS AS RECOMMENDED BY THE TOOLING MANUFACTURER SHALL BE USED.
8. BEDDING SAND SHALL CONFORM TO THE GRADING REQUIREMENTS OF ASTM C 33 AS SHOWN IN TABLE 1.
9. STAMPED CONCRETE TO FOLLOW EXPANSION AND CONTROL JOINT PATTERN OF THE ROADWAY.

TABLE 1

GRADING REQUIREMENTS FOR BEDDING SAND
ASTM C 33

SIEVE SIZE	PERCENT PASSING
⅜IN. (9.5mm)	100
NO. 4 (4.75mm)	95 TO 100
NO. 8 (2.36mm)	80 TO 100
NO. 16 (1.18mm)	50 TO 85
NO. 30 (600um)	25 TO 60
NO. 50 (300um)	10 TO 30
NO. 100 (150um)	0 TO 10
NO. 200 (75um)	.LT. 2%

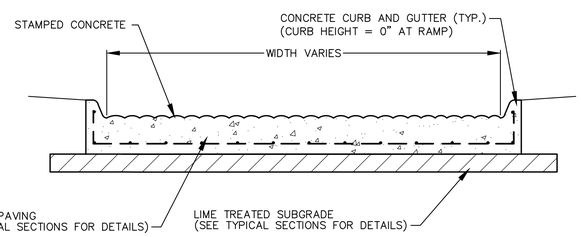

STAMPED CONCRETE CROSSWALK/
WELCOME MAT DETAIL
N.T.S.

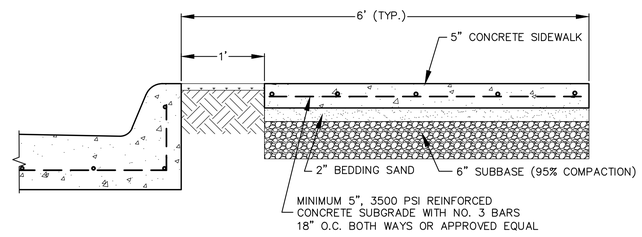

SIDEWALK EDGE STAMPED
CONCRETE DETAIL
N.T.S.

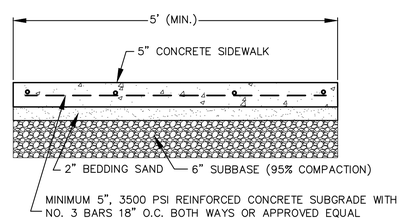

SIDEWALK DETAIL
N.T.S.

SIDEWALK NOTES:

1. PROVIDE ¼" EXPANSION JOINT WHERE NEW SIDEWALK ABUTS EXISTING SIDEWALK AND AT 100' INTERVALS
2. PROVIDE ¼"W x ¼"D SAWCUT JOINTS AT 5' INTERVALS
3. BEDDING SAND SHALL CONFORM TO THE GRADING REQUIREMENTS OF ASTM C33 AS SHOWN IN TABLE 1.
4. SIDEWALK TO CONFORM TO ALL A.D.A. AND TEXAS ACCESSIBILITY STANDARDS (TAS)
5. MAXIMUM GRADE LESS THAN FIVE PERCENT (5%).
6. CROSS SLOPE MAXIMUM IS ONE AND ONE HALF PERCENT (1.5%)

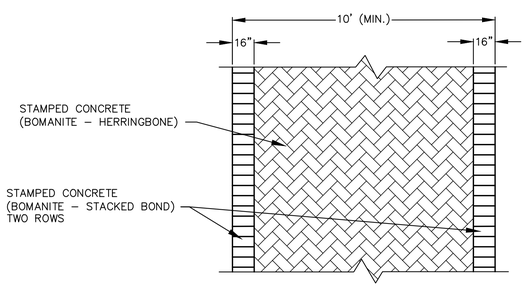

STAMPED CONCRETE CROSSWALK DETAIL
(PLAN VIEW)
N.T.S.

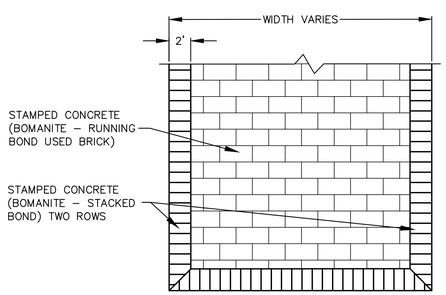

STAMPED CONCRETE WELCOME MAT DETAIL
(PLAN VIEW)
N.T.S.

DATE	REVISION	NO.

DESIGN BY:	TRC
DRAWN BY:	TRC
CHECKED BY:	TRC
SCALE:	NONE
JOB NUMBER:	–

TOWN OF LITTLE ELM, TEXAS
STANDARD DETAILS
MEDIAN AND SIDEWALK STAMPED CONCRETE DETAILS

LITTLEELM

SHEET
7 OF 21

MAY 2016

NOTE:

CENTER OF POSTS SHALL BE PLACED NEXT TO CONCRETE SIDEWALK. THE POSTS SHALL BE CENTERED WITH THE PARKING PLACE.

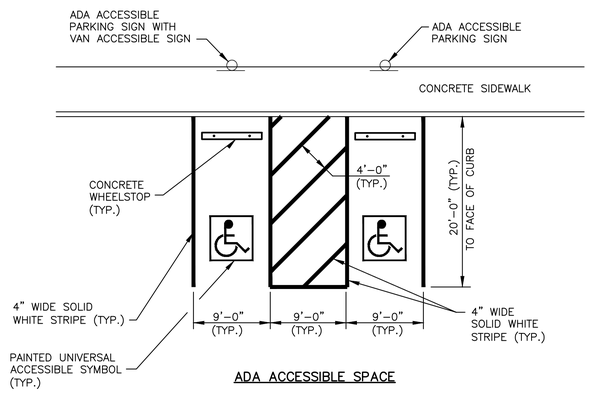

ADA ACCESSIBLE SPACE

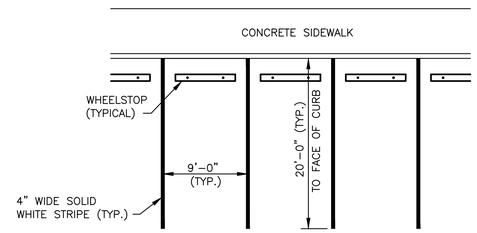

STANDARD SPACE

PARKING SPACE STRIPING
N.T.S.

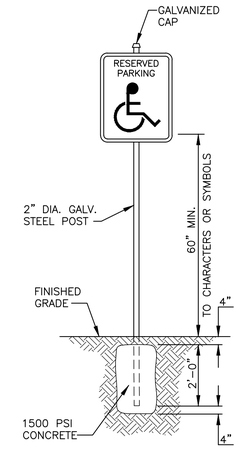

ADA ACCESSIBLE PARKING

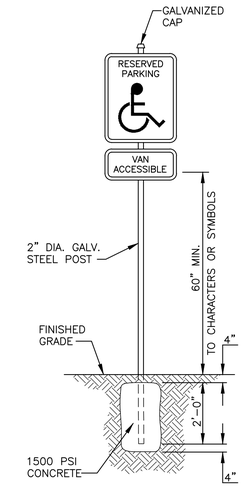

ADA ACCESSIBLE PARKING WITH VAN ACCESSIBLE

PARKING SIGN
N.T.S.

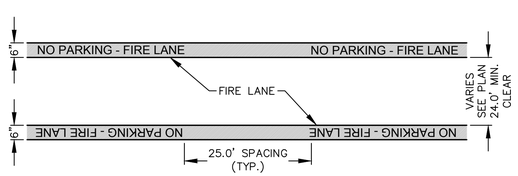

NOTES:
1. PAVEMENT MARKING SHALL BE FROM THE TOP OF THE SEAM OF THE CURB TO A POINT EVEN WITH THE DRIVING SURFACE.
2. THE STRIPE MAY BE BRUSHED OR SPRAYED, ONE COAT FINISH.
3. LETTERING SHALL BE STENCIL FORMED, BRUSH APPLIED AND SPACED AS DETAILED.
4. PAINT:
   A. STRIPING SHALL BE SIX INCHES (6") WIDE PAINTED WITH AN EXTERIOR ACRYLIC LATEX PAINT. COLOR SHALL BE "TRAFFIC RED" GLIDDEN NO. 63251 OR APPROVED EQUAL.
   B. LETTERING SHALL BE FOUR INCHES (4") HIGH PAINTED WITH AN EXTERIOR ACRYLIC LATEX PAINT. LETTERS SHALL BE ONE INCH (1") STROKE. COLOR SHALL BE "TRAFFIC WHITE" GLIDDEN NO. 563245 OR APPROVED EQUAL.

FIRE LANE STRIPING DETAIL
N.T.S.

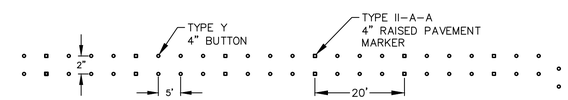

DOUBLE YELLOW LINE

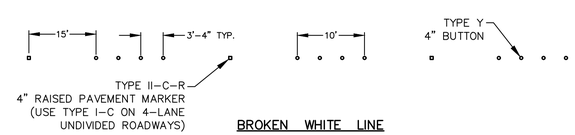

BROKEN WHITE LINE

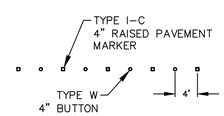

TYPCIAL WHITE EDGE LINE

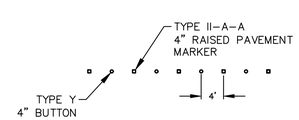

YELLOW EDGE LINE

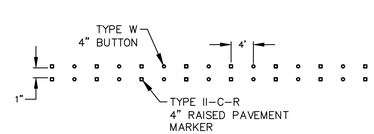

TURN BAY LINE

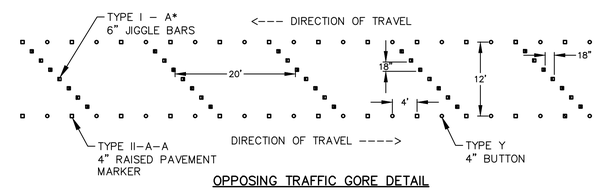

OPPOSING TRAFFIC GORE DETAIL

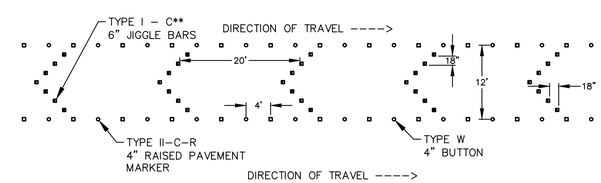

NEUTRAL AREA CHANNELIZATION

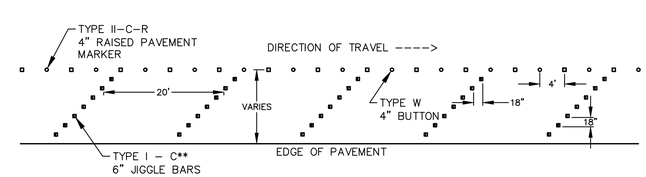

LANE DROP

* REFLECTOR PATTERN WILL ALTERNATE

** REFLECTOR WILL BE TOWARD TRAFFIC

PAVEMENT MARKINGS DETAIL
N.T.S.

DATE	REVISION	NO.	

DESIGN BY:	TRC
DRAWN BY:	TRC
CHECKED BY:	TRC
SCALE:	NONE
JOB NUMBER:	-

TOWN OF LITTLE ELM, TEXAS
STANDARD DETAILS
PAVEMENT MARKING DETAILS

LITTLE ELM

SHEET 8 OF 21

MAY 2016

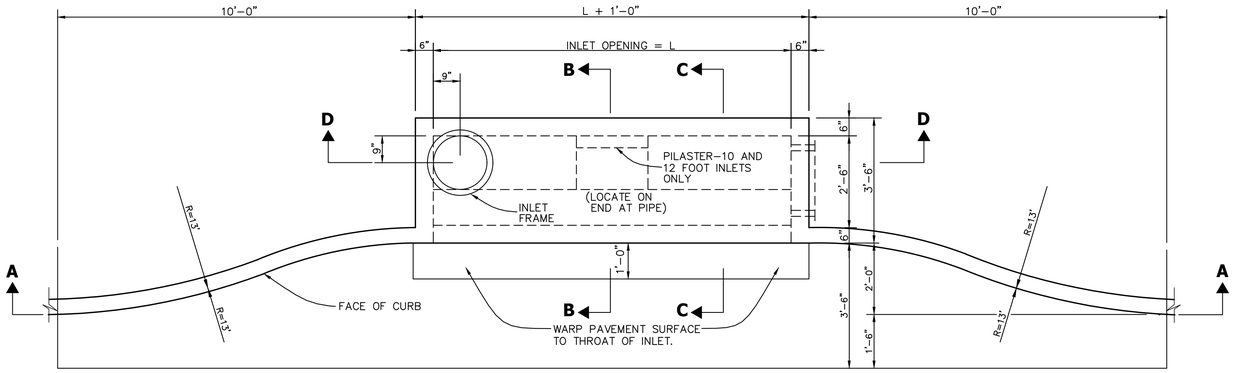

PLAN – RECESSED INLET

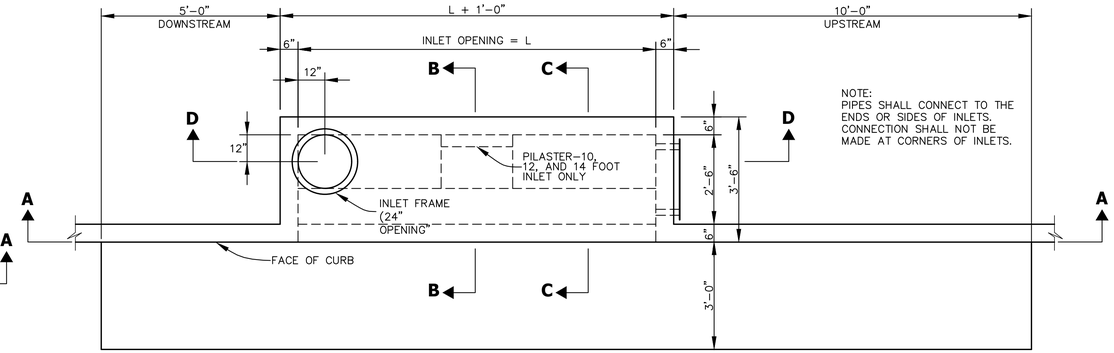

PLAN – STANDARD INLETS

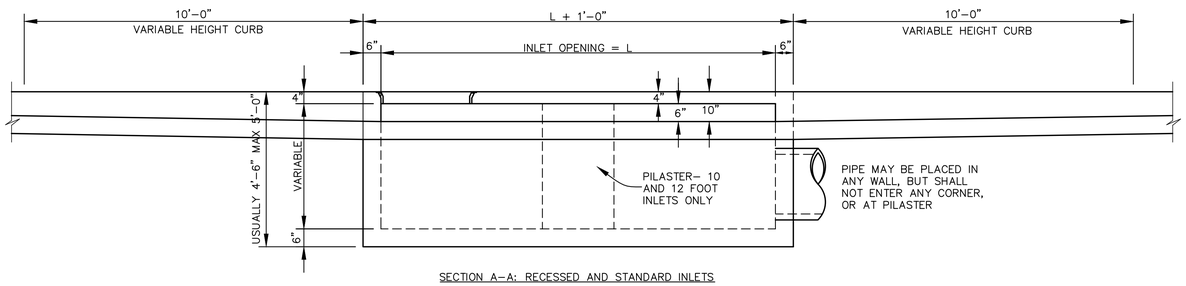

SECTION A–A; RECESSED AND STANDARD INLETS

8, 10, AND 12 FOOT INLETS

N.T.S.

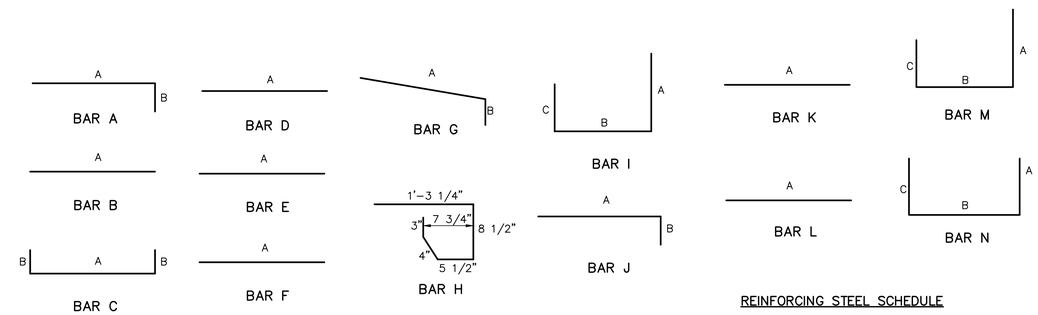

BAR DIAGRAMS

REINFORCING STEEL SCHEDULE

DIMENSIONS SHOWN ARE FOR MAXIMUM SIZE INLETS

INLET LENGTH	BAR TYPE	BAR DIA. (1/8")	NO. REQ'D	BAR DIMENSIONS A	B	C
8	A	3	12	3'-2"	0'-3"	–
	B	3	1	6'-10"	–	–
	C	4	15	8'-8'	0'-6"	–
	D	4	5	4'-8"	–	–
	F	4	1	3'-2"	–	–
	G	3	5	2'-0"	1'-3"	–
	H	3	4	*	*	*
	N	3	3	3'-2"	3'-2"	3'-2"
10	A	3	10	3'-2"	0'-3"	–
	B	3	2	8'-10"	–	–
	C	4	16	10'-8"	0'-6"	–
	D	4	4	4'-8"	–	–
	E	5	6	10'-8"	–	–
	G	3	5	2'-0"	1'-3"	–
	H	3	15	*	*	*
	I	4	8	4'-8"	3'-2"	3'-2"
	J	5	9	3'-2"	1'-3"	–
	K	4	5	2'-3"	–	–
	L	4	5	4'-3"	–	–
	M	5	9	4'-3"	3'-2"	3'-9"
12	A	3	12	3'-2"	0'-3"	–
	B	3	2	10'-10"	–	–
	C	4	16	12'-8"	0'-6"	–
	D	4	4	4'-8"	–	–
	E	5	6	12'-8"	–	–
	G	3	5	2'-0"	1'-3"	–
	H	3	18	*	*	*
	I	4	10	4'-8"	3'-2"	3'-2"
	J	5	9	3'-2"	1'-3"	–
	K	4	5	2'-3"	–	–
	L	4	5	4'-3"	–	–
	M	5	9	4'-3"	3'-2"	3'-9"

* SEE DIAGRAM FOR DIMENSIONS

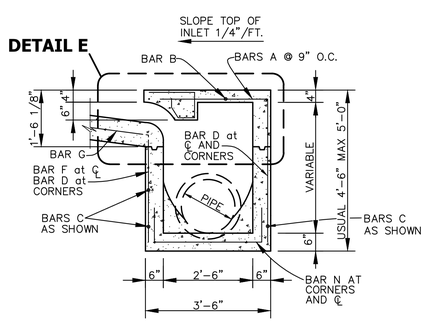

SECTION B–B

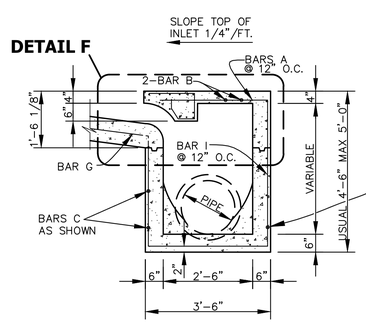

SECTION C–C

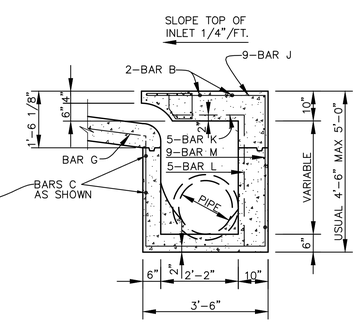

SECTION B–B
(FOR 12 FOOT INLETS ONLY)

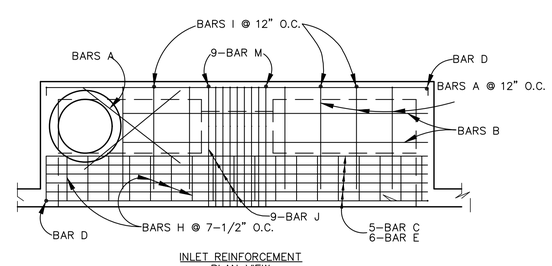

INLET REINFORCEMENT
PLAN VIEW

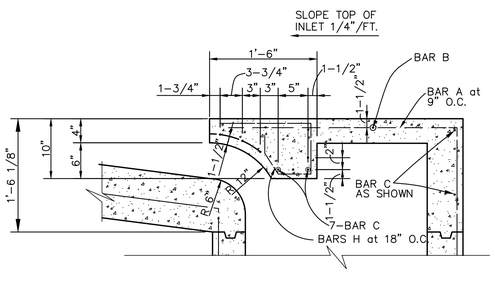

DETAIL E

8 FOOT INLETS

N.T.S.

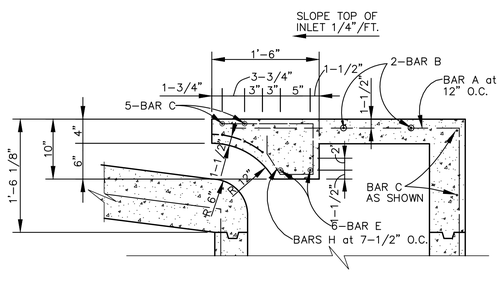

DETAIL F

10 AND 12 FOOT INLETS

N.T.S.

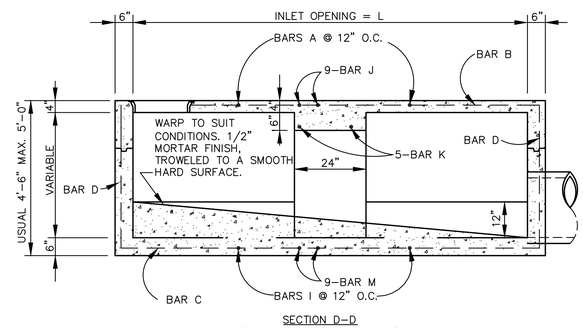

SECTION D–D
(FOR 12 FOOT INLETS ONLY)

DATE	REVISION	NO.

DESIGN BY: TRC
DRAWN BY: TRC
CHECKED BY: TRC
SCALE: NONE
JOB NUMBER: –

TOWN OF LITTLE ELM, TEXAS
STANDARD DETAILS
TYPICAL STORM SEWER DETAILS 1 OF 3

LITTLE ELM

SHEET 9 OF 21

MAY 2016

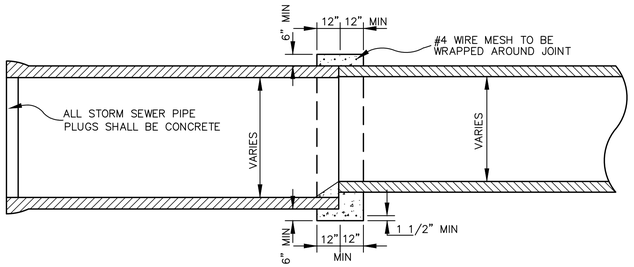

DETAIL OF CONCRETE COLLAR FOR PIPE CONNECTIONS
N.T.S.

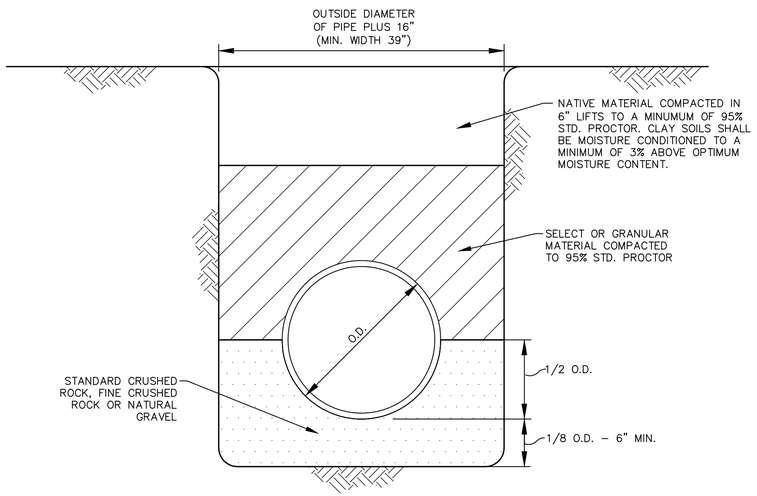

MIN. STD. R.C.P. STORM
N.T.S.

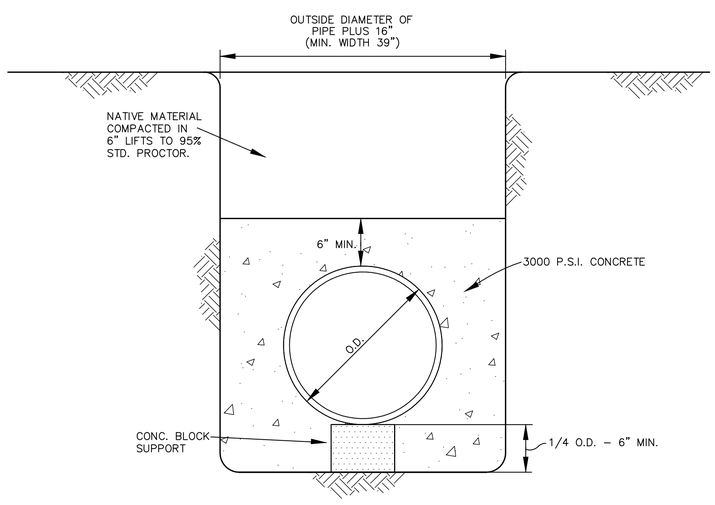

CONCRETE ENCASEMENT
N.T.S.

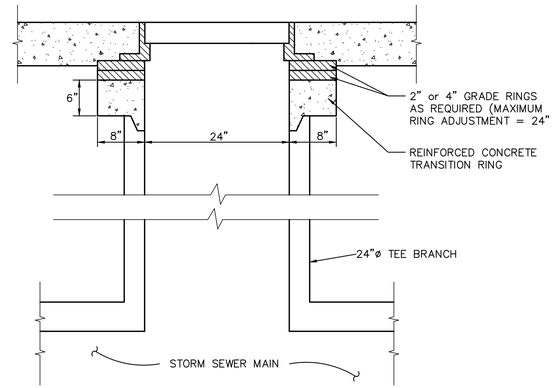

NOTES:
1. FRAME AND COVER SHALL BE BASS & HAYES PATTERN No. 400–24 OR EQUAL AND SHALL BE GRAY CAST IRON CONFORMING TO A.S.T.M SPEC. A–48 FOR CLASS 30 CAST IRON. RAISED LETTERS SHALL SAY "STORM SEWER".

STORM SEWER ACCESS MANHOLE
N.T.S.

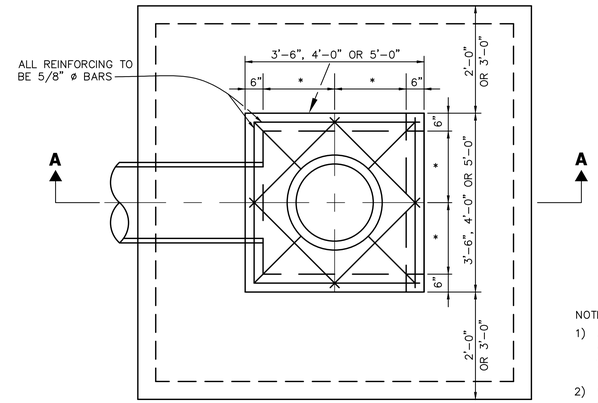

PLAN

NOTES:
1) ALL REINFORCING BAR LAPS AND EXTENSIONS SHALL BE 36 BAR DIAMETERS UNLESS NOTED OTHERWISE.
2) * = 1'–3", 1'–6" OR 2'–0"
2) Y–INLET DIMENSIONS CALLED OUT ON PLANS = INSIDE WALL DIMENSIONS.

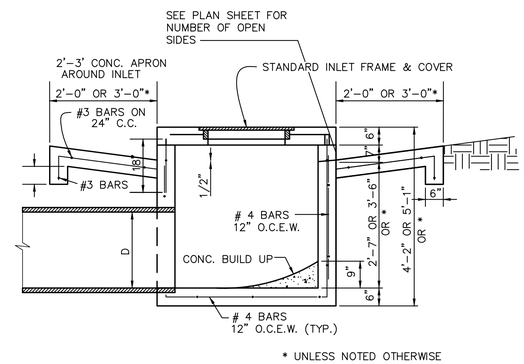

* UNLESS NOTED OTHERWISE

SECTION A–A

TYPE "Y" INLET DETAIL
N.T.S.

INLET MARKER DETAIL
N.T.S.

NOTES:

1. SIGN MANUFACTURED BY DAS MANUFACTURING INC. 3610 CINNAMON TRACE DR, VALRICO, FL 33596. (800)549–6024 OR (813) 681–6024. WWW.DASMANUFACTURING.COM.
2. COLORING:
   BUTTON – BACKGROUND IS WHITE
   NO DUMPING – BACKGROUND IS BLUE
   DRAINS TO LAKE – BACKGROUND IS GREEN
   LOGO – UPPER RIGHT 2 BARS ARE BLUE, LEFT & LOWER BARS ARE GREEN
   LITTLE ELM LETTERING IS BLUE
   SEPARATOR – TOP WAVE IS BLUE, BOTTOM WAVE IS GREEN
3. ADHESIVE IS CURB MARKER ADHESIVE RS–222

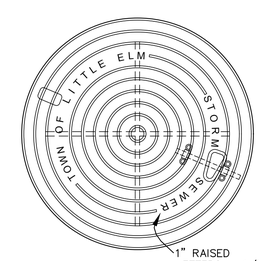

PLAN

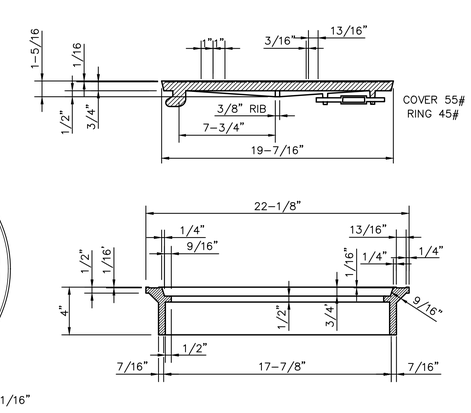

SECTION

INLET FRAME AND COVER
N.T.S.

DATE	REVISION	NO.	

DESIGN BY:	TRC
DRAWN BY:	TRC
CHECKED BY:	TRC
SCALE:	NONE
JOB NUMBER:	–

TOWN OF LITTLE ELM, TEXAS
STANDARD DETAILS
TYPICAL STORM SEWER DETAILS 2 OF 3

LITTLE ELM

SHEET
10 OF 21

MAY 2016

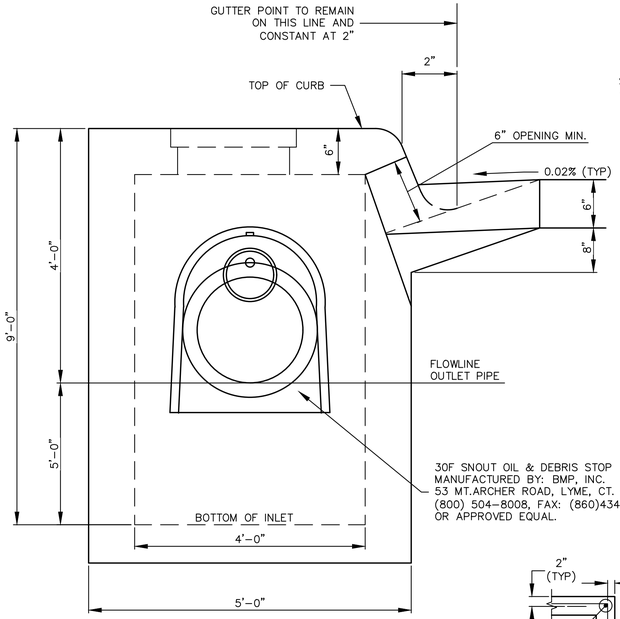

SECTION A–A
N.T.S.

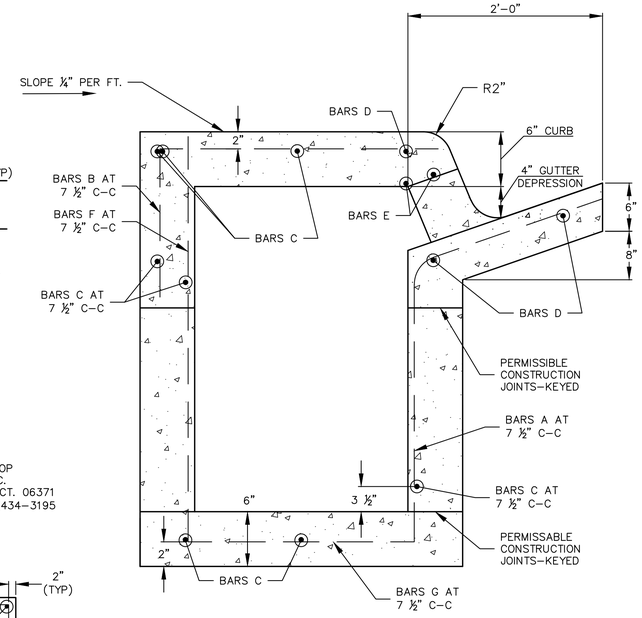

SECTION B–B
N.T.S.

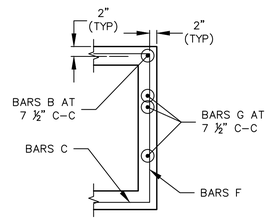

SECTION C–C
N.T.S.

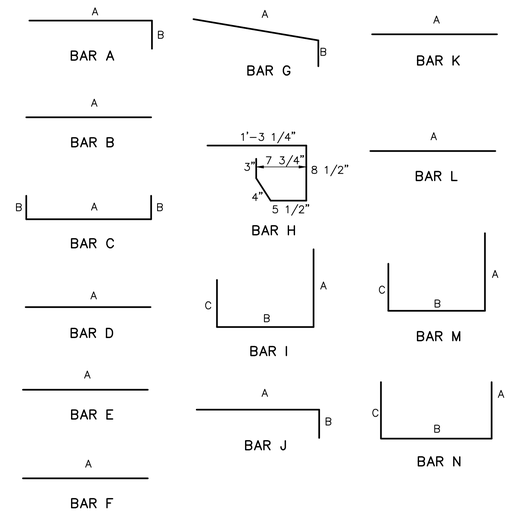

BAR DIAGRAMS

REINFORCING STEEL SCHEDULE

DIMENSIONS SHOWN ARE FOR MAXIMUM SIZE INLETS

INLET LENGTH	BAR TYPE	BAR DIA. (1/8")	NO. REQ'D	BAR DIMENSIONS A	B	C
8	A	3	12	3'–2"	0'–3"	–
	B	3	1	6'–10"	–	–
	C	4	15	8'–8'	0'–6"	–
	D	4	5	4'–8"	–	–
	F	4	1	3'–2"	–	–
	G	3	5	2'–0"	1'–3"	–
	H	3	4	*	*	*
	N	3	3	3'–2"	3'–2"	3'–2"
10	A	3	10	3'–2"	0'–3"	–
	B	3	2	8'–10"	–	–
	C	4	16	10'–8"	0'–6"	–
	D	4	4	4'–8"	–	–
	E	5	6	10'–8"	–	–
	G	3	5	2'–0"	1'–3"	–
	H	3	15	*	*	*
	I	4	8	4'–8"	3'–2"	3'–2"
	J	5	9	3'–2"	1'–3"	–
	K	4	5	2'–3"	–	–
	L	4	5	4'–3"	–	–
	M	5	9	4'–3"	3'–2"	3'–9"
12	A	3	12	3'–2"	0'–3"	–
	B	3	2	10'–10"	–	–
	C	4	16	12'–8"	0'–6"	–
	D	4	4	4'–8"	–	–
	E	5	6	12'–8"	–	–
	G	3	5	2'–0"	1'–3"	–
	H	3	18	*	*	*
	I	4	10	4'–8"	3'–2"	3'–2"
	J	5	9	3'–2"	1'–3"	–
	K	4	5	2'–3"	–	–
	L	4	5	4'–3"	–	–
	M	5	9	4'–3"	3'–2"	3'–9"

* SEE DIAGRAM FOR DIMENSIONS

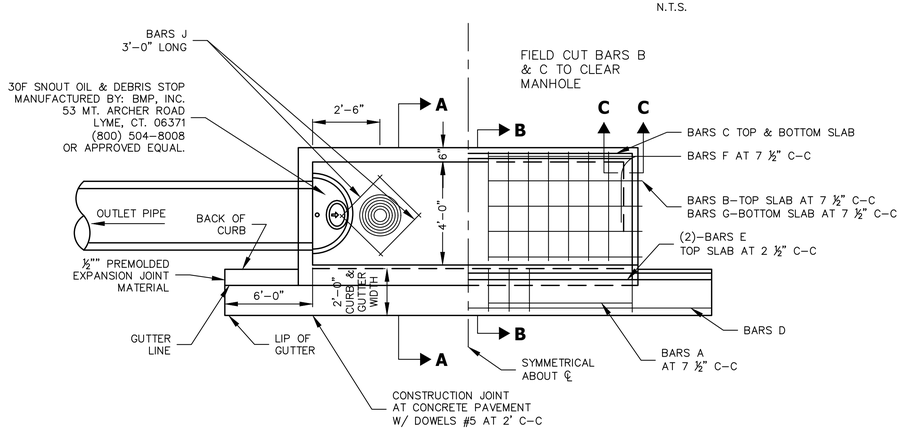

PLAN

NOTE:

1. LOCATION OF MANHOLE OPENING TO BE AT OUTFALL END, UNLESS OTHERWISE DIRECTED BY THE OWNER.
2. INLET SHALL HAVE "DRAIN TO LAKE" MARKER.

GENERAL NOTES:

1. ALL CONCRETE SHALL BE CLASS "A" CONCRETE.
2. REINFORCING BARS SHALL BE STANDARD GRADE STEEL, DEFORMED REINFORCING BARS OF DIAMETER AND LENGTH AS SHOWN.
3. CHAMFER ALL EXPOSED CORNERS ¾" EXCEPT WHERE OTHERWISE NOTED.
4. DIMENSIONS RELATING TO REINFORCING STEEL ARE TO CENTERS OF BARS.
5. FIELD CUT AND BEND BARS AS NECESSARY TO ACCOMODATE STORM SEWER PIPE.
6. RING AND COVER SHALL BE APPROVED BY THE OWNER AND INSTALLED BY THE CONTRACTOR.
7. DEBRIS SEPARATOR SHALL BE 30F SNOUT OIL & DEBRIS STOP MANUFACTURED BY: BMP, INC. 53 MT ARCHER ROAD, LYME, CT. 06371 (800) 504-8008 OR APPROVED EQUAL.

CURB INLET DEBRIS SEPARATOR DETAIL
N.T.S.

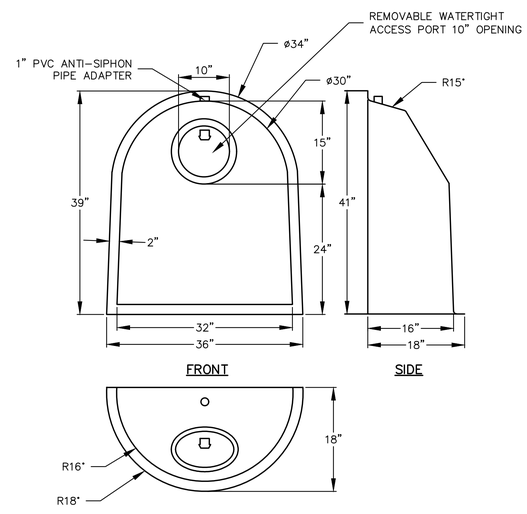

PLAN

30F SNOUT OIL & DEBRIS STOP
N.T.S.

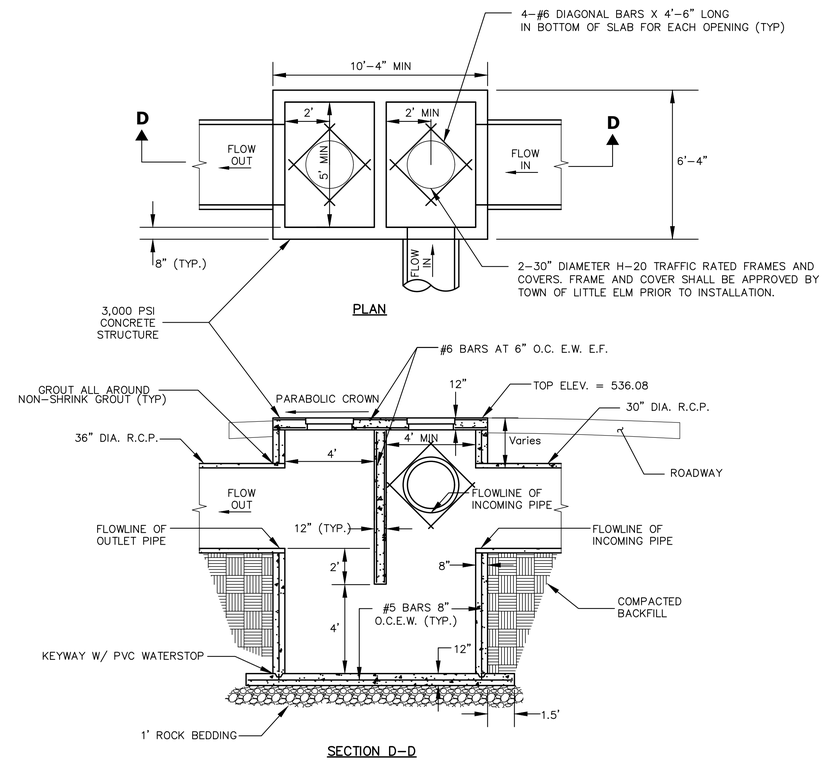

LARGE DEBRIS SEPARATOR DETAIL
N.T.S.

DATE	REVISION	NO.	DESIGN BY: TRC	DRAWN BY: TRC	CHECKED BY: TRC	SCALE: NONE	JOB NUMBER: –

TOWN OF LITTLE ELM, TEXAS
STANDARD DETAILS
TYPICAL STORM SEWER DETAILS 3 OF 3

LITTLEELM

SHEET 11 OF 21

MAY 2016

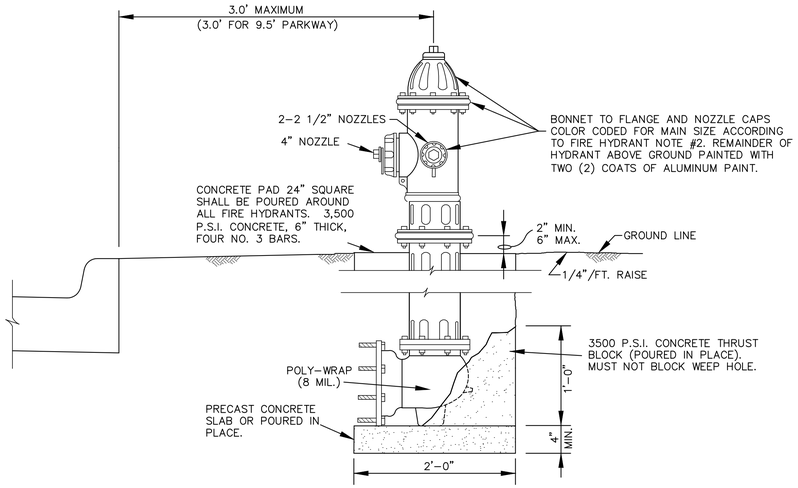

FIRE HYDRANT
N.T.S.

FIRE HYDRANT NOTES:

1. IN GENERAL ALL FIRE HYDRANTS SHALL CONFORM TO AWWA STANDARDS SPECIFICATIONS FOR FIRE HYDRANTS FOR ORDINARY WATER WORKS SERVICE FOR WATER AND SANITARY SEWER IMPROVEMENTS. FIRE HYDRANTS SHALL HAVE A 5-1/4" MINIMUM VALVE OPENING WITH A BARREL APPROXIMATELY 6" INSIDE DIAMETER. ALL HYDRANTS SHALL BE EQUIPPED WITH A BREAKAWAY FLANGE. ALL HYDRANTS SHALL BE APPROVED BY THE TOWN.
2. FIRE HYDRANT CAPS AND BONNETS SHALL BE PAINTED WITH TWO (2) COATS ACCORDING TO NFPA 291, CHAPTER 3.

CLASS C	LESS THAN 500 GALLONS PER MINUTE (GPM)	TNEMEC SERIES 2H-SC09 SAFETY RED
CLASS B	500-999 GALLONS PER MINUTE (GPM)	TNEMEC SERIES 2H-SC03 SAFETY ORANGE
CLASS A	1000-1499 GALLONS PER MINUTE (GPM)	TNEMEC SERIES 2H-SC07 SAFETY GREEN
CLASS AA	1500 GALLONS PER MINUTE (GPM) & ABOVE	TNEMEC SERIES 2H-SC06 SAFETY BLUE

3. ALL BOLTS AND NUTS USED WITH MECHANICAL JOINT FITTINGS SHALL BE "COR-TEN" OR APPROVED OTHER.
4. A BLUE STEMSONITE (OR APPROVED OTHER) MODEL 88-SSA FIRE HYDRANT MARKER WILL BE INSTALLED OPPOSITE FIRE HYDRANTS JUST OFF CENTER TO THE SIDE OF THE STREET ADJACENT TO THE HYDRANT.
5. INSTALL POLYETHYLENE WRAP AROUND DUCTILE IRON PIPE, RELATED FITTINGS AND VALVES. THIS WRAP SHALL BE 8 MILS. THICKNESS POLYTUBE. SEAMS AND OVERLAPS SHALL BE WRAPPED AND HELD IN PLACE BY TWO (2) INCH WIDE PLASTIC BACKED ADHESIVE TAPE, POLYKEN 900, SCOTCHRAP NO. 50, OR APPROVED OTHER, WITH APPROXIMATE TWO (2) FOOT LAPS ON THE POLYTUBE. THE WRAP ON THE BARREL OF THE PIPE SHALL BE LOOSE ENOUGH TO ALLOW THE FILM TO SHIFT WITH THE SOIL. THE WRAP SHALL BE INSTALLED WITHOUT BREAKS, TEARS OR HOLES IN THE FILM.
6. IN ORDER TO MAINTAIN A MANAGEABLE PARTS INVENTORY AND WORKING KNOWLEDGE OF FIRE HYDRANTS, THE FOLLOWING FIRE HYDRANTS ARE APPROVED: MUELLER AND WATEROUS THREE-WAY STANDARD THREAD WITH VALVE IN LEAD NO LESS THAN 5-1/4" IN SIZE OR APPROVED OTHER.
7. ALL COMMERCIAL FIRE HYDRANTS MUST COME WITH 4 1/2"-5" HYDRA-STORZ CONNECTION FOR FIRE DEPARTMENT.
8. CONCRETE PAD TWENTY-FOUR INCH (24") SQUARE SHALL BE POURED AROUND ALL FIRE HYDRANTS. CONCRETE SHALL BE 3000 PSI, SIX-INCH (6") THICK WITH FOUR (4) #3 BARS.

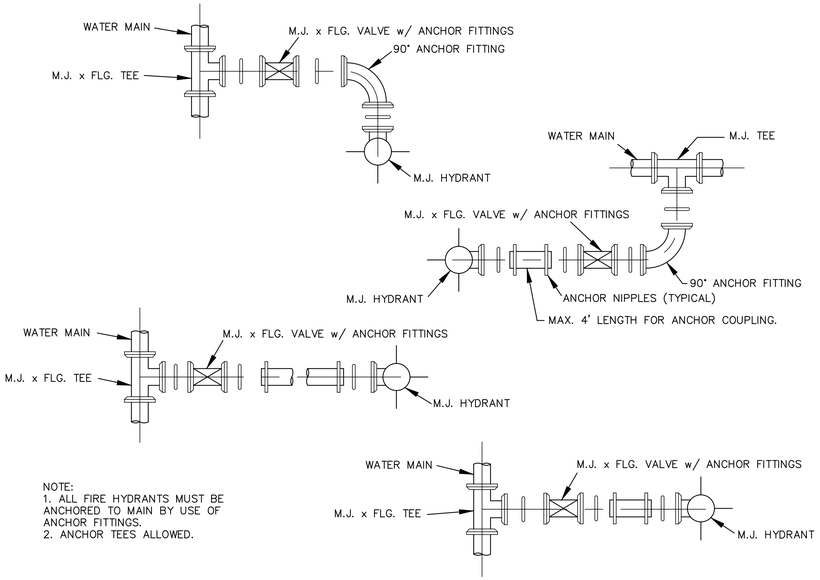

NOTE:
1. ALL FIRE HYDRANTS MUST BE ANCHORED TO MAIN BY USE OF ANCHOR FITTINGS.
2. ANCHOR TEES ALLOWED.

FIRE HYDRANT INSTALLATION
N.T.S.

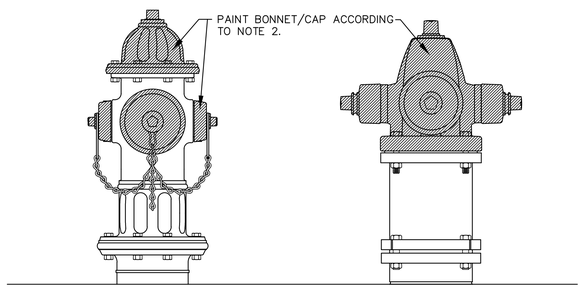

FIRE HYDRANT COLOR DETAIL
N.T.S.

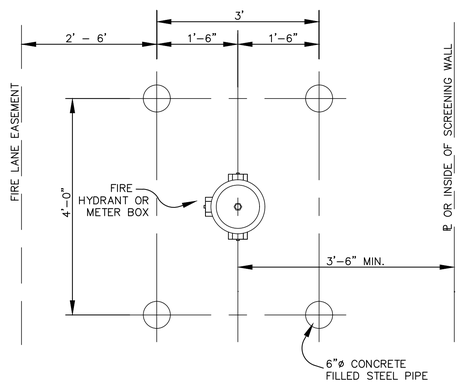

PIPE BOLLARD PROTECTION DETAIL
N.T.S.

NOTES:

1. FOR USE WHERE CURBS ARE NOT POSSIBLE OR AS SPECIFIED BY THE TOWN ENGINEER.
2. FIRE HYDRANTS SHALL BE 35' CLEAR OF ALL BUILDINGS.
3. GUARD POSTS SHALL BE 6 L.F. OF 6" DIA. STEEL PIPE (3' ABOVE & BELOW GROUND LEVEL). POST SHALL BE ENCASED IN 16" DIA. CONC. PIER TO A DEPTH OF 12" BELOW POST BOTTOM. REINF. CONC. PIER WITH 2 NO. 6 BARS (12" LONG) THRU POST INTO PIER. POST ABOVE GROUND LEVEL SHALL BE PAINTED WITH TWO (2) COATS OF ALUMINUM PAINT.

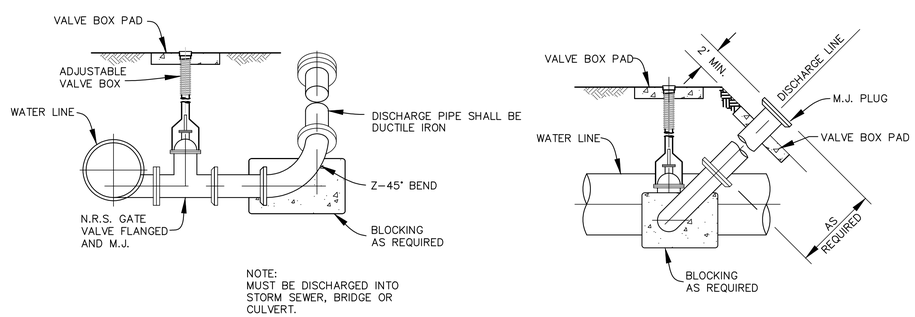

NOTE:
MUST BE DISCHARGED INTO STORM SEWER, BRIDGE OR CULVERT.

DRAIN VALVE AND BLOW OFF VALVE
N.T.S.

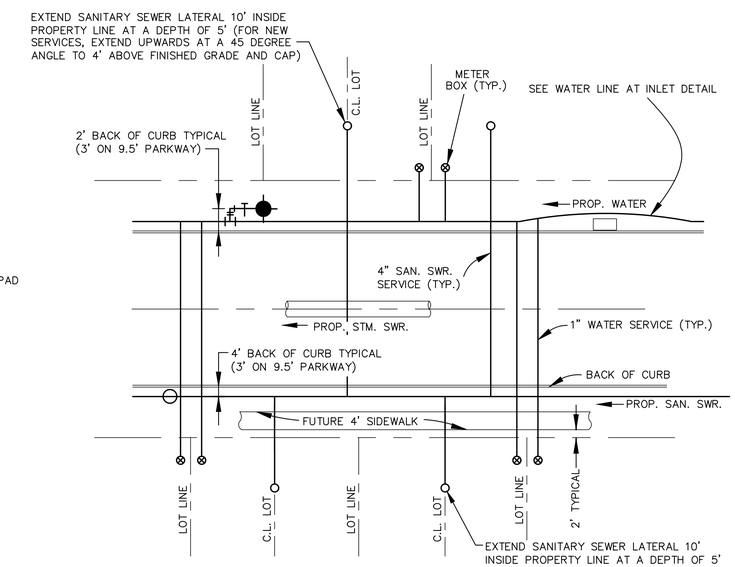

TYPICAL LOT SERVICE DETAIL
N.T.S.

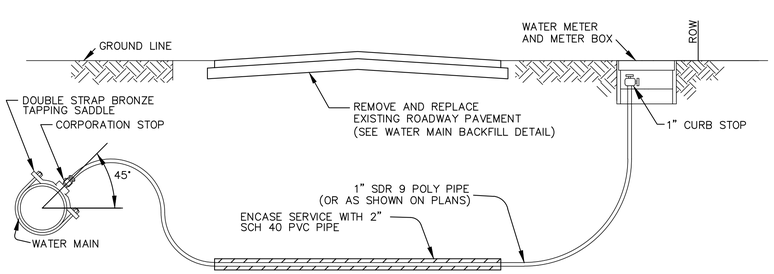

SERVICE UNDERNEATH PAVEMENT

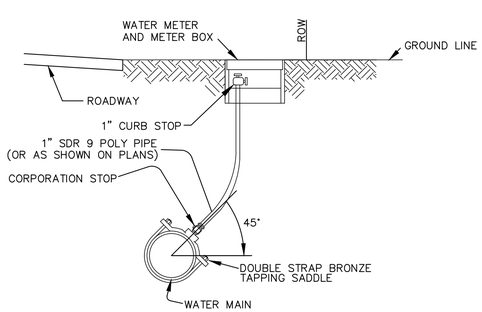

SERVICE OUTSIDE OF PAVEMENT

WATER SERVICE NOTES:

A. WATER SERVICES SHALL NOT BE CONNECTED TO FIRE HYDRANT LINES.
B. ALL MATERIALS SHALL CONFORM TO THE STANDARD SPECIFICATIONS.
C. METER BOX SIZES:
   - 5/8", 3/4" AND 1" SHALL BE DFW PLASTICS MODEL DFW-1814F-1BA. (18X14 PIT-CI RING W/ BLACK BRASS LOCK AMR LID)
   - 1-1/2" AND 2" SHALL BE DFW PLASTICS MODEL DFW-2414FX-1BA. (24X14 PIT-CI RING W/ 20" BLACK BRASS LOCK AMR LID)
D. METER BOX SHALL BE LOCATED OUT OF ALL FLATWORK, SIDEWALKS AND APPROACHES.
E. BACKFLOW PREVENTER IS REQUIRED ON RESIDENTIAL SIDE OF METER.
F. WATER SERVICE SHALL BE REPLACED FROM MAIN TO EXISTING WATER METER. SERVICE LINE BACKFILL SHALL BE IDENTICAL TO WATER MAIN.
G. REFER TO WATER MAIN BACKFILL DETAIL FOR SERVICE CONNECTIONS LOCATED BENEATH PAVEMENT.

WATER METER INSTALLATION NOTES:

1. WATER METER SHALL BE PLACED IN CENTER OF LOT WITH THE SANITARY SEWER HOUSE CONNECTION TO BE LOCATED 10 FEET DOWNSTREAM. ALL TAPS SHALL BE MADE AT A 45° ANGLE TO THE CENTERLINE OF THE PIPE.
2. THE CONTRACTOR SHALL SET THE METER BOX IN ALL CASES.
3. THE METER BOX SHALL BE SET WITHIN THE RIGHT-OF-WAY OR A DEDICATED WATER EASEMENT. IN ALL CASES THE METER BOX SHALL BE PROTECTED FROM VEHICULAR TRAFFIC.
4. WATER METER BOX SHALL BE PROTECTED BY A 6" CURB OR GUARD POSTS WHEN PLACED IN A PAVED AREA, WHICH REQUIRES SPECIFIC APPROVAL BY THE TOWN ENGINEER OR HIS/HER DESIGNEE.
5. WATER SERVICES SHALL BE EMBEDDED IN SAND FROM CORPORATION STOP TO CURB STOP.
6. ALL BRASS PRODUCTS THAT COME INTO CONTACT WITH POTABLE WATER MUST MEET NEW "LEAD FREE" STANDARDS AS DEFINED UNDER PUBLIC LAW 111-380.
7. CONTRACTOR SHALL VERIFY METER ASSEMBLY FOR METER RELOCATIONS WITH TOWN STAFF PRIOR TO CONSTRUCTION.

DATE	REVISION	NO.	

DESIGN BY:	TRC
DRAWN BY:	TRC
CHECKED BY:	TRC
SCALE:	NONE
JOB NUMBER:	-

TOWN OF LITTLE ELM, TEXAS
STANDARD DETAILS
TYPICAL WATER SYSTEM DETAILS 1 OF 4

LITTLEELM

SHEET
12 OF 21

MAY 2016

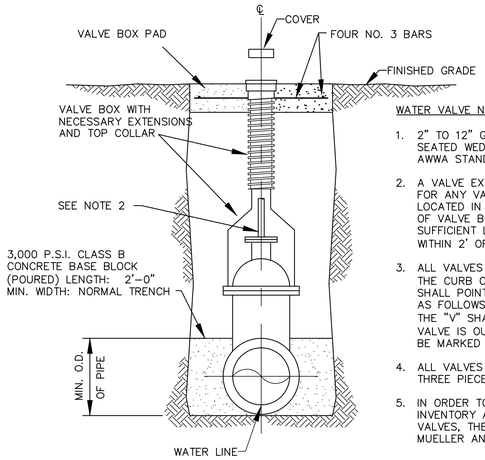

WATER VALVE NOTES:

1. 2" TO 12" GATE VALVE SHALL BE RESILIENT SEATED WEDGE GATE VALVES ACCORDANCE WITH AWWA STANDARD C-509.
2. A VALVE EXTENSION STEM SHALL BE REQUIRED FOR ANY VALVE WHOSE OPERATING NUT IS LOCATED IN EXCESS OF 4 FEET BELOW THE TOP OF VALVE BOX. THIS EXTENSION SHALL BE OF SUFFICIENT LENGTH TO INSURE THAT ITS TOP IS WITHIN 2' OF THE VALVE BOX COVER.
3. ALL VALVES SHALL BE MARKED WITH A SAW ON THE CURB OR PAVEMENT WITH "V". THE "V" SHALL POINT TO THE LOCATION OF THE VALVE AS FOLLOWS: IF THE VALVE IS IN THE PAVING, THE "V" SHALL BE MARKED UPRIGHT; IF THE VALVE IS OUTSIDE THE PAVING, THE "V" SHALL BE MARKED UPSIDE DOWN.
4. ALL VALVES STACK COMPONENTS SHALL BE THREE PIECE SCREW TYPE CAST IRON.
5. IN ORDER TO MAINTAIN A MANAGEABLE PARTS INVENTORY AND WORKING KNOWLEDGE OF VALVES, THE FOLLOWING VALVES ARE APPROVED: MUELLER AND WATEROUS – 150 P.S.I. TEST.

GATE VALVE
VALVE SETTING & BOX
N.T.S.

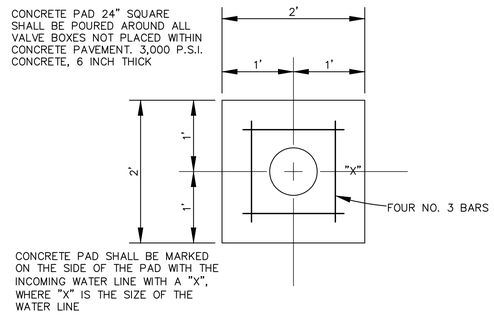

VALVE BOX PAD PLAN
N.T.S.

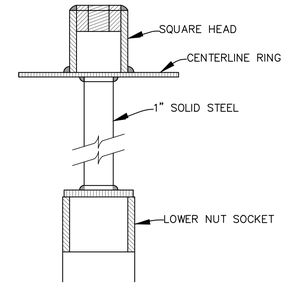

VALVE EXTENSION
N.T.S.

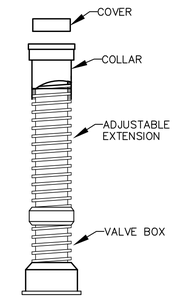

VALVE BOX WITH EXTENSION
N.T.S.

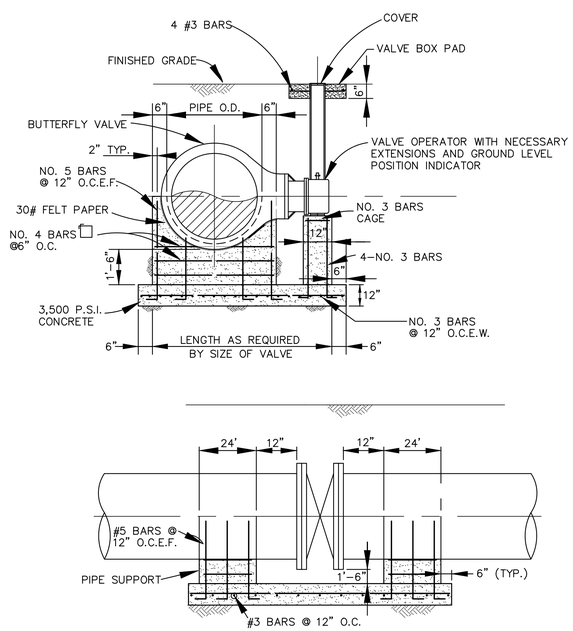

NOTES:

1. ALL OPERATING NUTS SHALL BE EXTENDED TO WITHIN 6" OF FINAL GRADE.
2. BUTTERFLY VALVE SHALL BE MANUFACTURED BY MUELLER OR ENGINEER-APPROVED EQUAL.
3. 6" BYPASS MAY BE REQUIRED BY TOWN ENGINEER OR HIS/HER DESIGNEE ON SITE SPECIFIC PROJECTS.

BUTTERFLY VALVE
N.T.S.

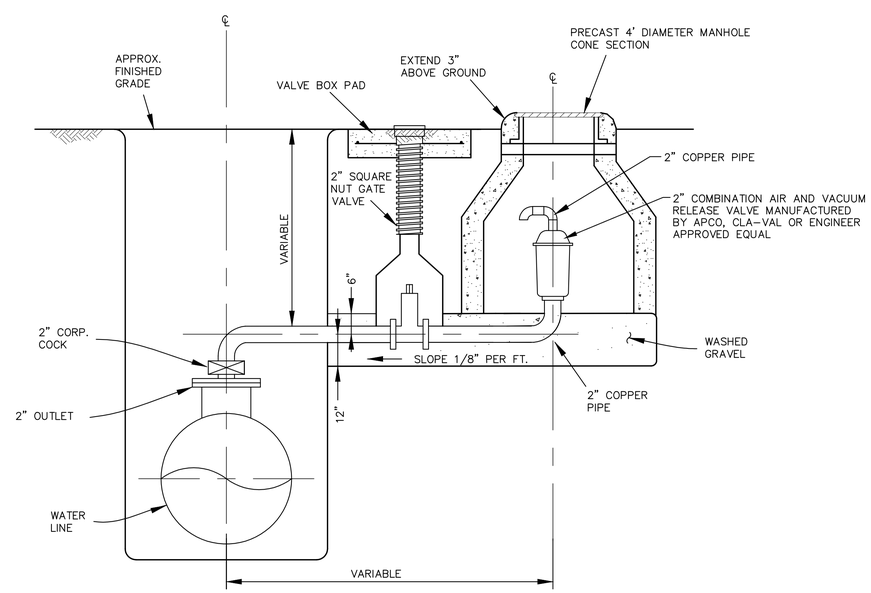

2" COMBINATION AIR AND VACUUM RELEASE VALVE
N.T.S.

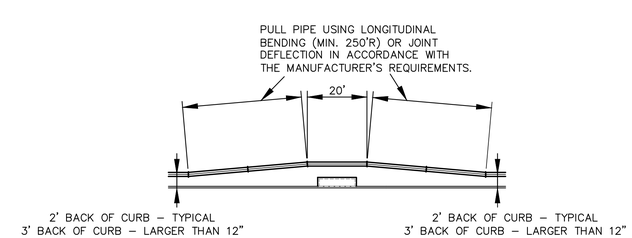

WATER LINE AT INLET DETAIL
N.T.S.

DATE	REVISION	NO.

DESIGN BY:	TRC
DRAWN BY:	TRC
CHECKED BY:	TRC
SCALE:	NONE
JOB NUMBER:	–

TOWN OF LITTLE ELM, TEXAS
STANDARD DETAILS
TYPICAL WATER SYSTEM DETAILS 2 OF 4

LITTLEELM

SHEET
13 OF 21

MAY 2016

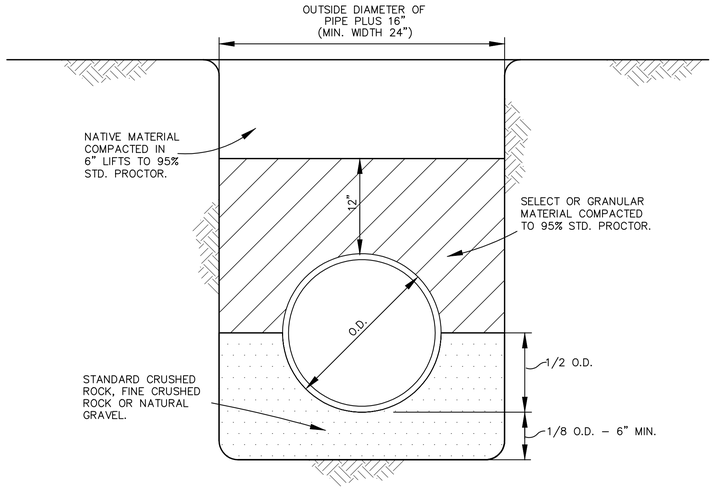

MIN. STD P.V.C. WATER
N.T.S.

CLASS F1 EMBEDMENT

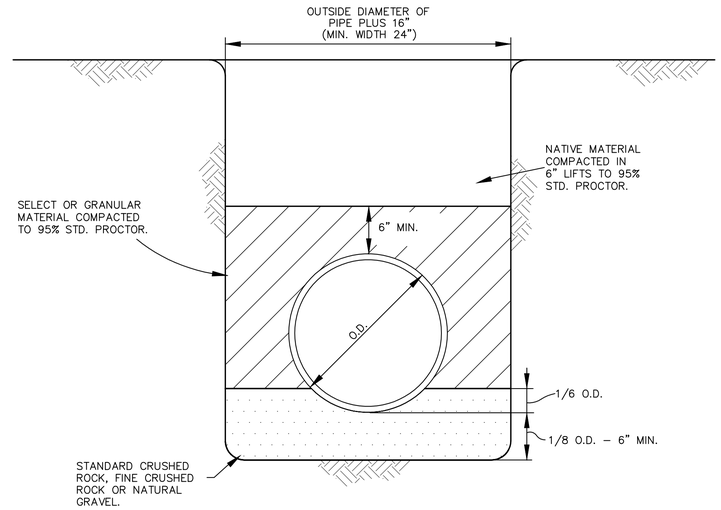

MIN. STD. DUCTILE IRON WATER
MIN. STD. R.C.C.P. WATER
N.T.S.

CLASS F3 EMBEDMENT

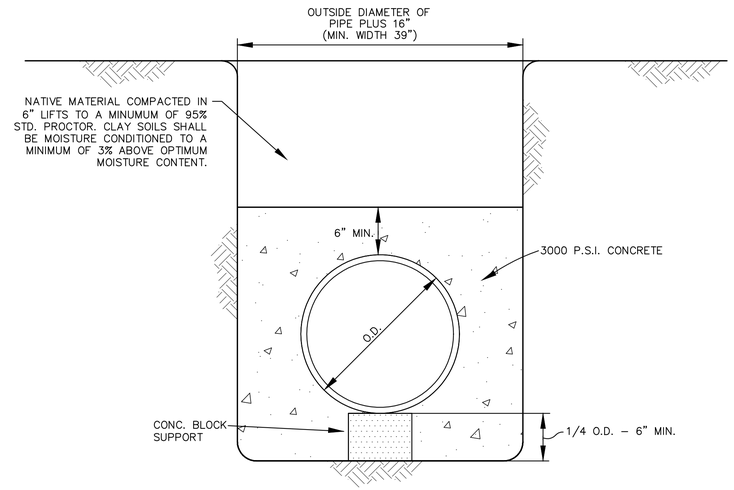

CONCRETE ENCASEMENT
N.T.S.

CLASS F4 EMBEDMENT

NOTES:

A. WATER SERVICES SHALL NOT BE CONNECTED TO FIRE HYDRANT LINES.
B. ALL MATERIALS SHALL CONFORM TO THE STANDARD SPECIFICATIONS.
C. METER BOX AND LID:
   – 5/8", 3/4" AND 1" SHALL BE DFW PLASTICS MODEL DFW–1814F–1BA. (18X14 PIT–CI RING W/ BLACK BRASS LOCK AMR LID)
   – 1–1/2" AND 2" SHALL BE DFW PLASTICS MODEL DFW–2414FX–1BA. (24X14 PIT–CI RING W/ 20" BLACK BRASS LOCK AMR LID)
D. METER BOX SHALL BE LOCATED OUT OF ALL FLATWORK, SIDEWALKS AND APPROACHES.
E. BACKFLOW PREVENTER IS REQUIRED ON RESIDENTIAL SIDE OF METER.

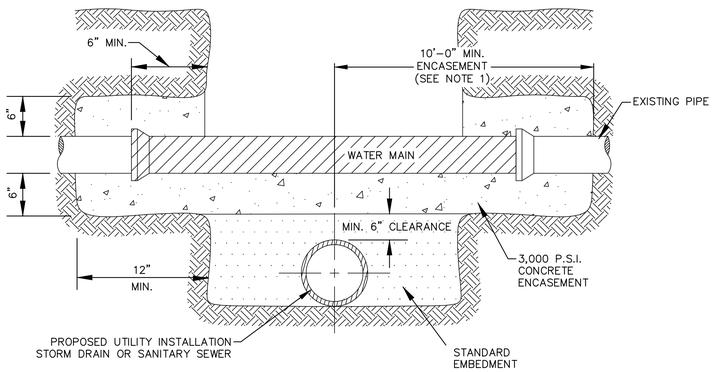

MINIMUM CLEARANCE NOTE:

1. WHERE A MINIMUM CLEARANCE OF 10'–0" (HORIZONTAL AND/OR VERTICAL) CANNOT BE OBTAINED, THEN THE POTABLE WATER MAIN SHALL BE CONCRETE ENCASED FOR 10'–0" EACH SIDE OF THE INTERSECTION OF THE INSTALLED UTILITY LINE.
2. CROSSING OF SANITARY SEWER SHALL BE IN ACCORDANCE WITH THE LATEST TCEQ RULES AND REGULATIONS.

CROSSING UTILITY
PIPE SUPPORT
N.T.S.

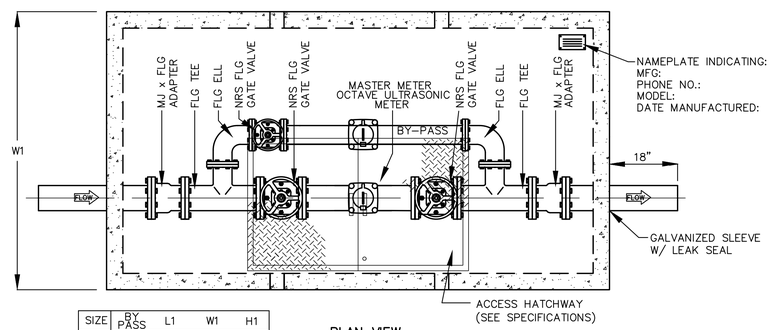

SIZE	BY PASS	L1	W1	H1
3"	2"	8'–8"	4'–8"	4'–6"
4"	2"	8'–8"	4'–8"	4'–6"
6"	4"	11'–0"	6'–0"	4'–6"

PLAN VIEW

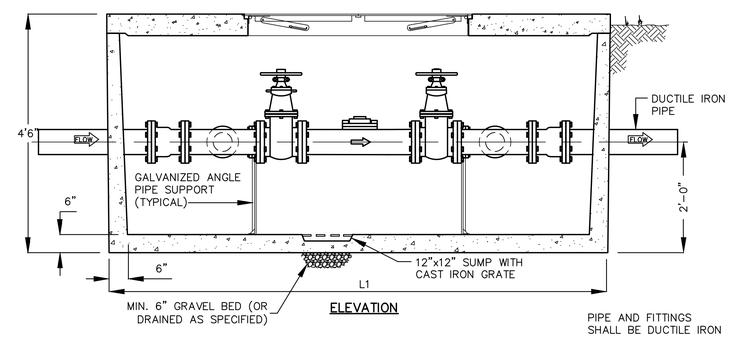

ELEVATION

SPECIFICATIONS

CONCRETE : CLASS 1 CONCRETE WITH DESIGN STRENGTH OF 4500 PSI AT 28 DAYS. UNIT IS OF MONOLITHIC CONSTRUCTION AT FLOOR AND FIRST STAGE OF WALL WITH SECTIONAL RISER TO REQUIRED DEPTH.

REINFORCEMENT: GRADE 60 REINFORCED. STEEL BAR CONFORMING TO ASTM A615 ON REQUIRED CENTERS OR EQUAL.

HATCHWAY: 3' X 5' GALVANIZED STEEL DOUBLE LEAF SPRING ASSISTED HATCHWAY – TRAFFIC RATED W/ SLAM LOCK.

PRECAST VAULT SHALL BE FROM PARK EQUIPMENT COMPANY MATCHING DETAIL SHOWN OR APPROVED OTHER.

METER VAULT
N.T.S.

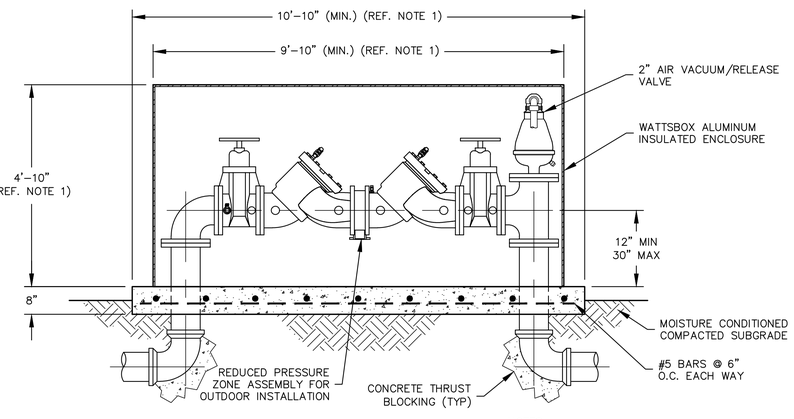

BACKFLOW PREVENTER
N.T.S.

NOTES:

1. EXACT SIZE OF BOX MAY VARY DEPENDING ON ACTUAL LENGTH OF RPZ BACKFLOW PREVENTER.
2. AIR/VACUUM RELEASE ASSEMBLY SHALL BE ARI FLOW CONTROL ACCESSORIES, MODEL D–025, WITH NYLON BODY.
3. FIELD ROUTE DRAIN LINES FROM RPZ AND AIR RELEASE VALVE TO A COMMON DISCHARGE POINT.

DATE	REVISION	NO.

DESIGN BY:	TRC
DRAWN BY:	TRC
CHECKED BY:	TRC
SCALE:	NONE
JOB NUMBER:	–

TOWN OF LITTLE ELM, TEXAS
STANDARD DETAILS
TYPICAL WATER SYSTEM DETAILS 3 OF 4

LITTLEELM

SHEET
14 OF 21

MAY 2016

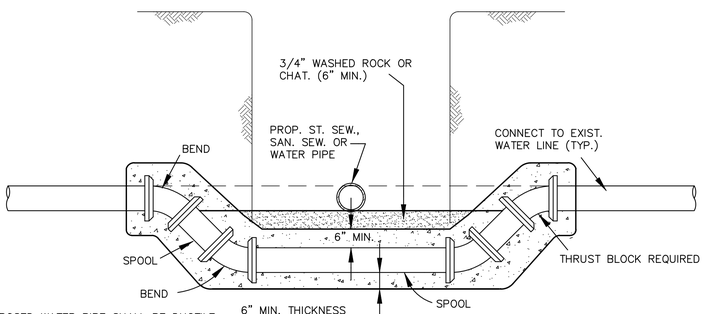

NOTES:

1. PROPOSED WATER PIPE SHALL BE DUCTILE IRON UNLESS OTHERWISE SPECIFIED IN PLANS. ALL FITTINGS SHALL BE DUCTILE IRON (M.J.–P.E.) MEGALUG.
2. PROPOSED PIPING & FITTINGS ARE SYMMETRIC ABOUT CENTER OF PROP. SAN. SEW. OR ST. SEW. PIPE AND SHALL RETAIN TEST PRESSURES.
3. CROSSING OF SANITARY SEWER SHALL BE IN ACCORDANCE WITH TCEQ REQUIREMENTS.

WATER MAIN LOWERING
N.T.S.

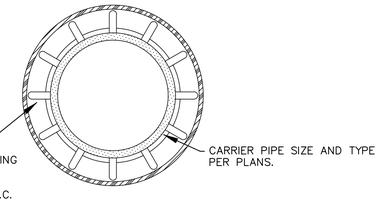

CASING SPACERS SHALL BE USED TO INSTALL CARRIER PIPE INSIDE THE ENCASEMENT PIPE. TO PROVIDE SUPPORT AROUND THE PERIPHERY OF THE PIPE SHOULD THE PIPE TWIST AS IT IS PUSHED THROUGH THE CASING, THE SPACERS SHALL BE OF A PROJECTION TYPE THAT HAS A MINIMUM NUMBER OF PROJECTIONS AROUND THE CIRCUMFERENCE TOTALLING THE NUMBER OF DIAMETER INCHES. FOR EXAMPLE, 8" PIPE SHALL HAVE A MINIMUM OF 8 PROJECTIONS AND 18" PIPE SHALL HAVE A MINIMUM NUMBER OF 18 PROJECTIONS.

CASING SPACERS SHALL HAVE A MAXIMUM SPACING SPAN OF 10 FEET. THE SPAN BETWEEN SPACERS SHOULD RESULT IN CONSERVATIVE LONG TERM SAFETY FACTOR PROVIDED TOTAL LOAD PER SPACER DOES NOT EXCEED THE MAXIMUM LOAD FOR PIPE FULL OF LIQUID PER SPACER LISTED IN THE LITERATURE FOR CLASS SPACER USED. SPACERS SHALL HAVE A MINIMUM HEIGHT THAT CLEARS THE PIPE BELL OR AS OTHERWISE INDICATED ON PLANS. CASING SPACERS SHALL USE DOUBLE BACKED TAPE PROVIDED WITH THE SPACERS, TO FASTEN TIGHTLY ONTO THE CARRIER PIPE, SO THAT THE SPACERS DO NOT MOVE DURING INSTALLATION.

PIPE CASING SPACER DETAIL
N.T.S.

SPACERS SHALL BE RACI HIGH DENSITY POLYETHYLENE OR TOWN APPROVED OTHER.

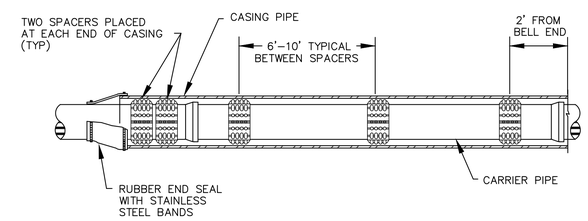

PIPE CASING SPACERS SPACING DETAIL
N.T.S.

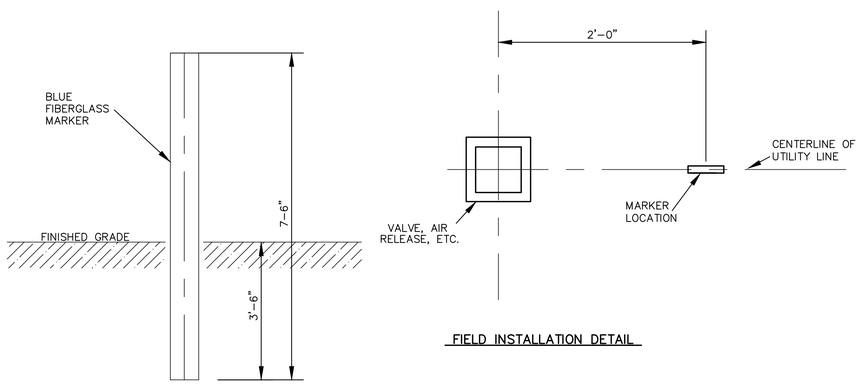

FIELD INSTALLATION DETAIL

ELEVATION

GENERAL NOTES

1. ALL OFFSITE TOWN OF LITTLE ELM MAINS WITH VALVES, AIR RELEASE VALVES, ETC. SHALL BE MARKED AS DETAILED ON THIS SHEET.

OFFSITE WATER MAIN MARKER
N.T.S.

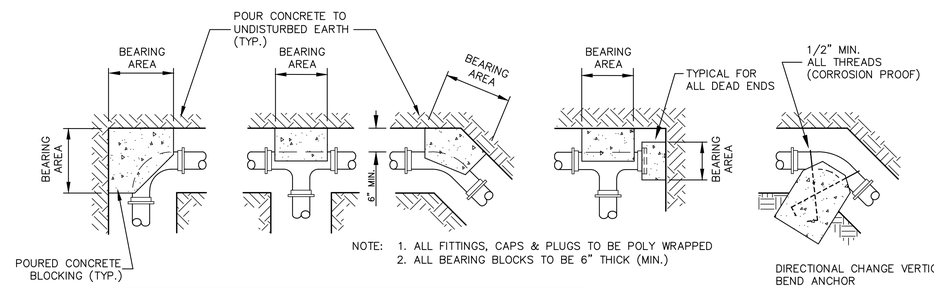

NOTE: 1. ALL FITTINGS, CAPS & PLUGS TO BE POLY WRAPPED
2. ALL BEARING BLOCKS TO BE 6" THICK (MIN.)

MIN. BEARING AREA OF BLOCK IN SQ. FT.
(UNLESS OTHERWISE INDICATED ON THE PLANS)

FITTING SIZES	TEE & END	90° BEND	45° BEND	22 1/2° BEND	11 1/4° BEND
TO 6"	3.6	5.4	2.5	2.0	2.0
8"	6.3	8.9	4.8	2.5	2.0
10"	9.9	13.9	7.6	3.9	2.0
12"	14.2	20.0	10.9	5.6	2.8
16"	25.1	35.5	19.2	9.8	4.9

SOIL BEARING PRESSURE	MULTIPLIER
1000	2.0
1500	1.33
2000	1.0
3000	0.67

WATER MAIN THRUST BLOCKING
N.T.S.

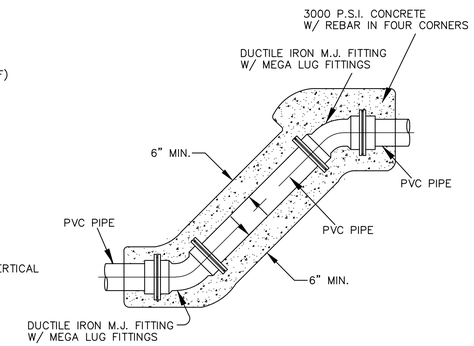

STANDARD HORIZONTAL AND/OR VERTICAL OFFSETS
N.T.S.

DATE	REVISION	NO.

DESIGN BY:	TRC
DRAWN BY:	TRC
CHECKED BY:	TRC
SCALE:	NONE
JOB NUMBER:	–

TOWN OF LITTLE ELM, TEXAS
STANDARD DETAILS
TYPICAL WATER SYSTEM DETAILS 4 OF 4

LITTLEELM

MAY 2016

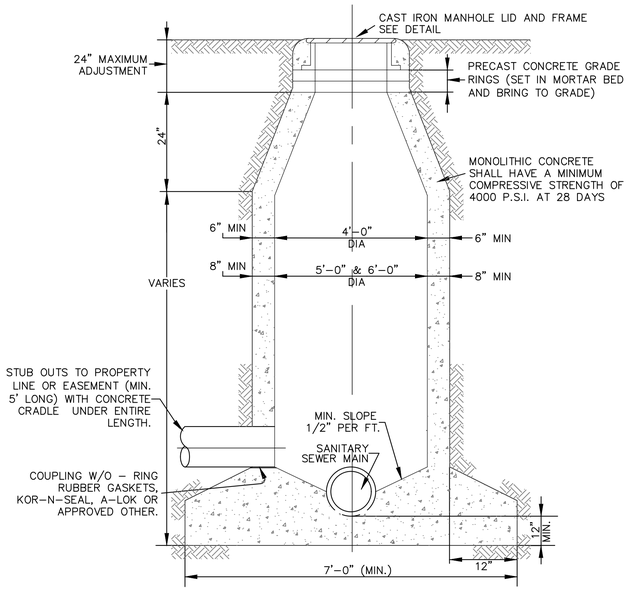

STANDARD CAST-IN-PLACE MANHOLE
N.T.S.

CAST-IN-PLACE MANHOLE NOTES:

1. THE DIAMETER OF A MANHOLE CONSTRUCTED OVER THE CENTER OF A SEWER SHOULD VARY WITH THE SIZE OF THE SEWER. FOR EIGHT-INCH (8"), TEN-INCH (10"), AND TWELVE-INCH (12"), THE MANHOLE SHALL BE FOUR-FOOT (4') MINIMUM DIAMETER, FOR FIFTEEN-INCH (15"), EIGHTEEN-INCH (18"), TWENTY-ONE-INCH (21"), TWENTY-FOUR-INCH (24") AND TWENTY-SEVEN-INCH (27") SHALL BE FIVE-FOOT (5') MINIMUM DIAMETER; THIRTY-INCH (30") AND THIRTY-SIX-INCH (36") SHALL BE SIX-FOOT (6') MINIMUM DIAMETER. MANHOLES DEEPER THAN TWELVE FEET (12') SHALL BE A MINIMUM OF FIVE-FOOT (5') DIAMETER.

2. DROP MANHOLES SHALL BE REQUIRED WHEN THE INFLOW ELEVATION IS MORE THAN TWENTY-FOUR INCHES (24") ABOVE THE OUTFALL ELEVATION.

3. WHERE PIPES ENTER A MANHOLE THERE SHALL BE A MINIMUM OF TWO-TENTHS OF A FOOT (0.2') DROP BETWEEN INVERTS.

4. WHERE UNEQUAL PIPES ENTER A MANHOLE, THE CROWN OF THE PIPES SHALL BE SET AT THE SAME ELEVATION.

5. CONCRETE SHALL BE A MONOLITHIC POUR.

PRECAST MANHOLE NOTES:

1. THE DIAMETER OF A MANHOLE CONSTRUCTED OVER THE CENTER OF A SEWER SHOULD VARY WITH THE SIZE OF THE SEWER. FOR EIGHT-INCH (8"), TEN-INCH (10"), AND TWELVE-INCH (12"), THE MANHOLE SHALL BE FOUR-FOOT (4') MINIMUM DIAMETER, FOR FIFTEEN-INCH (15"), EIGHTEEN-INCH (18"), TWENTY-ONE-INCH (21"), TWENTY-FOUR-INCH (24") AND TWENTY-SEVEN-INCH (27") SHALL BE FIVE-FOOT (5') MINIMUM DIAMETER; THIRTY-INCH (30") AND THIRTY-SIX-INCH (36") SHALL BE SIX-FOOT (6') MINIMUM DIAMETER. MANHOLES DEEPER THAN TWELVE FEET (12') SHALL BE A MINIMUM OF FIVE-FOOT (5') DIAMETER.

2. DROP MANHOLES SHALL BE REQUIRED WHEN THE INFLOW ELEVATION IS MORE THAN TWENTY-FOUR INCHES (24") ABOVE THE OUTFALL ELEVATION.

3. WHERE PIPES ENTER A MANHOLE THERE SHALL BE A MINIMUM OF TWO-TENTHS OF A FOOT (0.2') DROP BETWEEN INVERTS.

4. WHERE UNEQUAL PIPES ENTER A MANHOLE, THE CROWN OF THE PIPES SHALL BE SET AT THE SAME ELEVATION.

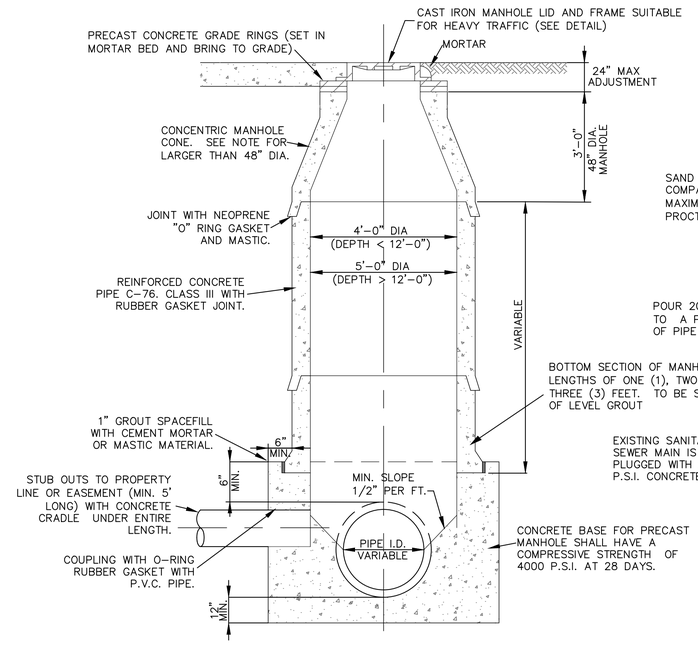

PRECAST CONCRETE PIPE MANHOLE
N.T.S.

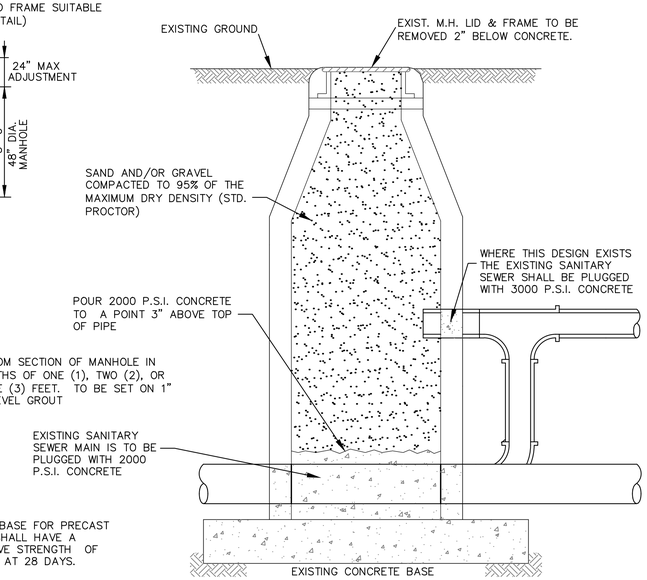

MANHOLE ABANDONMENT
N.T.S.

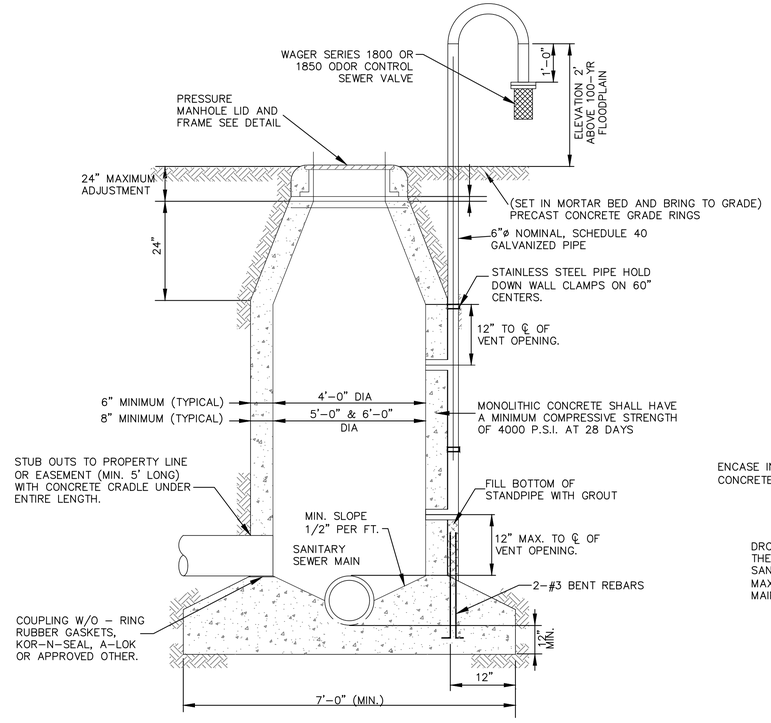

VENTED TYPE S MANHOLE
N.T.S.

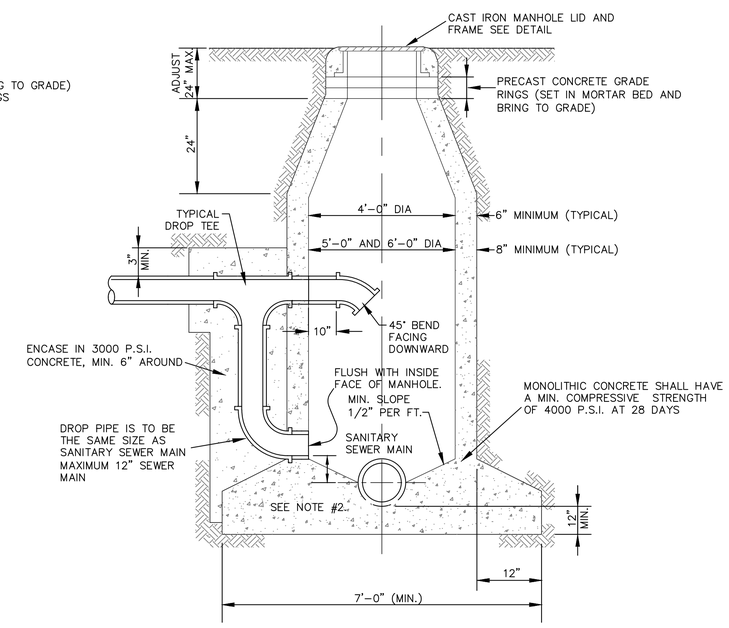

MANHOLE WITH OUTSIDE DROP CONNECTION
N.T.S.

DATE	REVISION	NO.	DESIGN BY: TRC	DRAWN BY: TRC	CHECKED BY: TRC	SCALE: NONE	JOB NUMBER: –

TOWN OF LITTLE ELM, TEXAS
STANDARD DETAILS
SANITARY SEWER STANDARD DETAILS 1 OF 3

LITTLEELM

SHEET 16 OF 21

MAY 2016

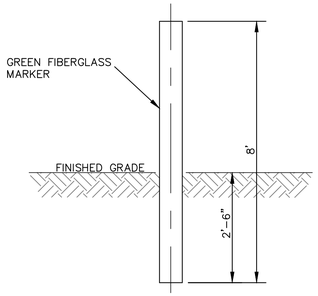

ELEVATION

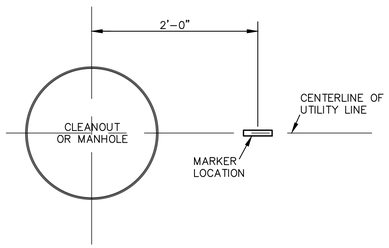

FIELD INSTALLATION DETAIL

OFFSITE SANITARY SEWER MARKER
N.T.S.

GENERAL NOTES

1. ALL OFFSITE TOWN OF LITTLE ELM MAINS WITH CLEANOUTS AND MANHOLES SHALL BE MARKED AS DETAILED ON THIS SHEET.

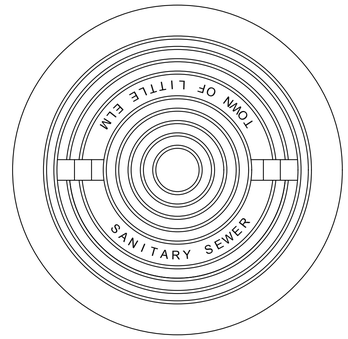

ASSEMBLY PLAN VIEW

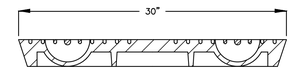

LID SECTION VIEW

INFLOW PROTECTION INSERT (SEE NOTE NO. 5)

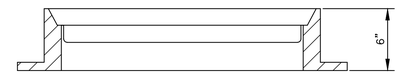

FRAME SECTION VIEW

GENERAL NOTES:
1. MANHOLE LID SHALL BE SOLID AND PROVIDED WITH PICK SLOTS ONLY

2. 30" HEAVY DUTY MANHOLE FRAME AND COVER IS TO BE CASTED 400 LBS WITH A DESIGN STRENGTH OF 4000 PSI.

3. THE HORIZONTAL BEARING SURFACES ARE TO BE MACHINE FINISHED.

4. THE SOLID LID WILL BE PROVIDED WITH MANUFACTURER'S STANDARD LETTERING SHOWING "SANITARY SEWER".

5. INFLOW PROTECTION INSERT, MINIMUM THICKNESS OF ONE-EIGHT INCH (1/8"), MADE OF HDPE MEETING ASTM D 1248 CLASS A, CATEGORY 5, TYPE 111. INSERT SHALL INCLUDE A LIFT STRAP AND VENT HOLE WITH VENT DISK AS MANUFACTURED BY KNUTSON MANHOLE INSERTS OR APPROVED OTHER.

CAST IRON MANHOLE LID AND FRAME
N.T.S.

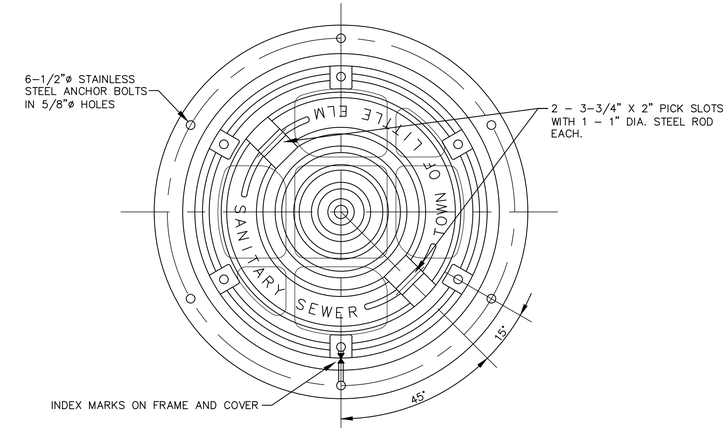

ASSEMBLY PLAN VIEW

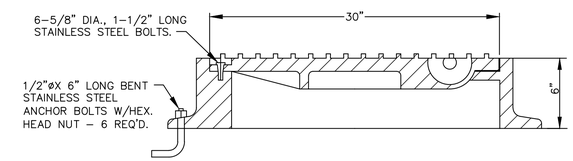

ASSEMBLY SECTION

GENERAL NOTES:
1. THE HORIZONTAL BEARING SURFACES ARE TO BE MACHINE FINISHED.
2. FOR A SEAL BETWEEN THE RING FRAME AND COVER A 1/4" DIAMETER NEOPRENE "O-RING" GASKET SHALL BE AS INSTALLED BY THE MANUFACTURER. THE LOCATION SHALL BE AS PER THE MANUFACTURER'S STANDARDS BUT SHALL BE SUBJECT TO THE APPROVAL OF THE TOWN ENGINEER.
3. THE SOLID LID WILL BE PROVIDED WITH MANUFACTURER'S STANDARD LETTERING SHOWING "SANITARY SEWER".
4. NOT ALLOWED IN TRAFFIC AREA.

PRESSURE MANHOLE FRAME & COVER
N.T.S.

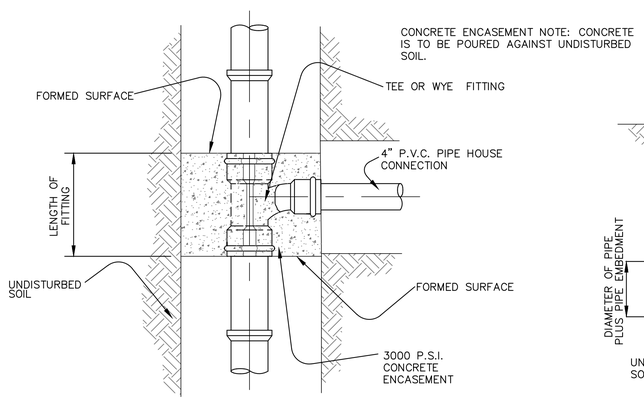

PLAN VIEW

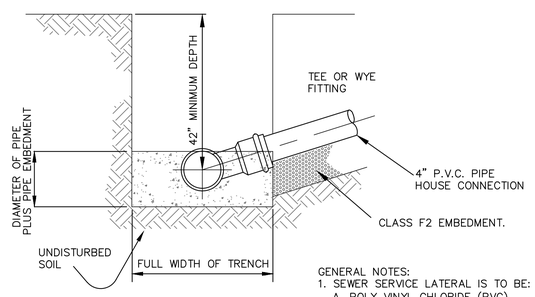

SECTION THRU TRENCH

GENERAL NOTES:
1. SEWER SERVICE LATERAL IS TO BE:
   A. POLY VINYL CHLORIDE (PVC)
   B. TYPE SDR 35, GREEN IN COLOR
   C. FITTINGS MAY BE GREEN OR WHITE IN COLOR.

RESIDENTIAL SANITARY SEWER SERVICE CONNECTION
N.T.S.

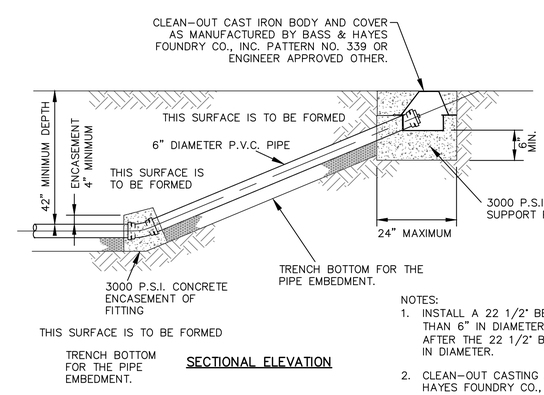

SECTIONAL ELEVATION

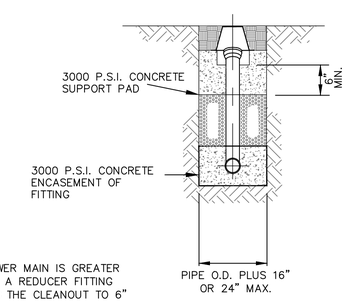

SECTION

NOTES:
1. INSTALL A 22 1/2° BEND IF THE SEWER MAIN IS GREATER THAN 6" IN DIAMETER THEN INSTALL A REDUCER FITTING AFTER THE 22 1/2° BEND, REDUCING THE CLEANOUT TO 6" IN DIAMETER.

2. CLEAN-OUT CASTING AS MANUFACTURED BY THE BASS & HAYES FOUNDRY CO., INC. PATTERN NO. 339 OR APPROVED OTHER.

3. CONCRETE PAD 24" SQUARE SHALL BE POURED AROUND ALL CLEANOUTS NOT PLACED WITHIN CONCRETE PAVEMENT. 3000 P.S.I. CONCRETE, 6" THICK, FOUR NO. 3 BARS.

SANITARY SEWER MAIN CLEANOUT
N.T.S.

DATE	REVISION	NO.	

DESIGN BY:	TRC
DRAWN BY:	TRC
CHECKED BY:	TRC
SCALE:	NONE
JOB NUMBER:	-

TOWN OF LITTLE ELM, TEXAS
STANDARD DETAILS
SANITARY SEWER STANDARD DETAILS 2 OF 3

LITTLEELM

SHEET
17 OF 21

MAY 2016

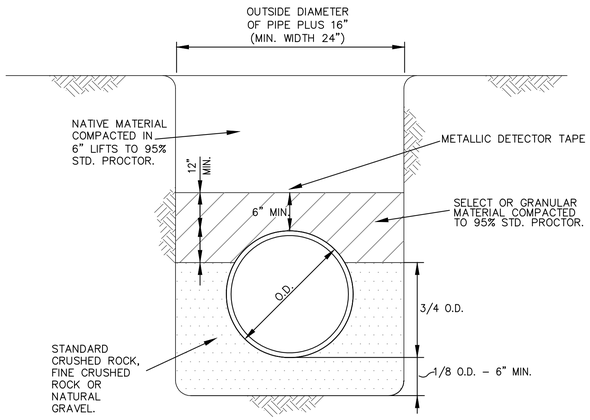

MIN. STD. P.V.C. SEWER
CLASS LE2 EMBEDMENT
N.T.S.

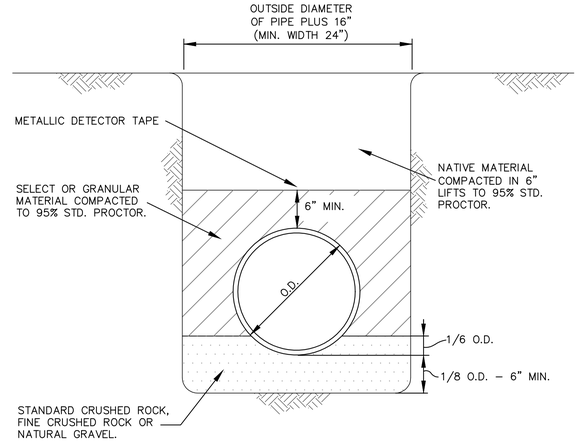

MIN. STD. DUCTILE IRON SEWER
CLASS LE3 EMBEDMENT
N.T.S.

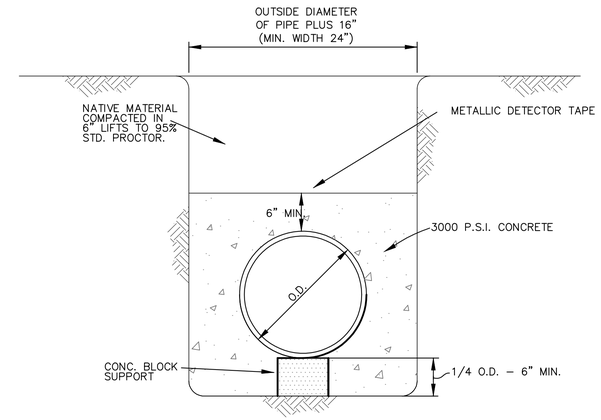

CONCRETE ENCASEMENT
CLASS LE4 EMBEDMENT
N.T.S.

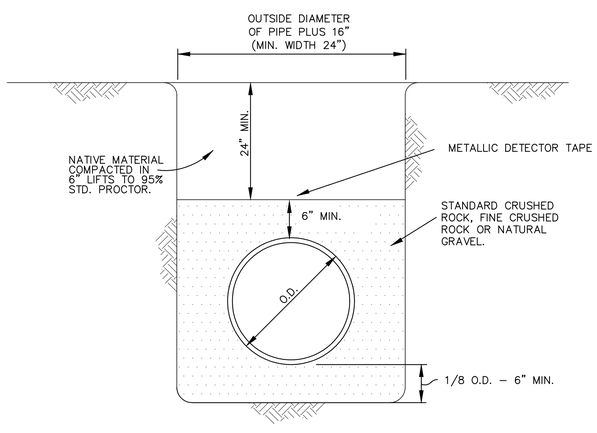

DEEP SDR 35 ENCASEMENT
CLASS LE5 EMBEDMENT
N.T.S.

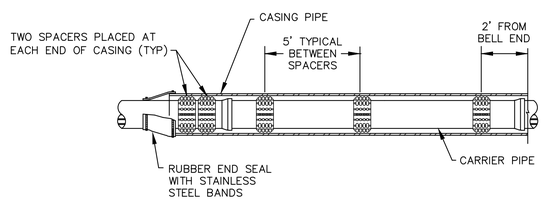

PIPE CASING SPACER
SPACING DETAILS

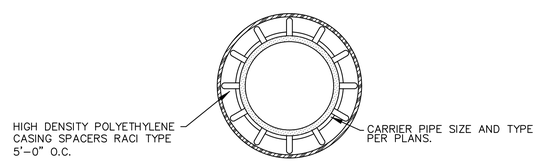

NOTES:

CASING SPACERS SHALL BE USED TO INSTALL CARRIER PIPE INSIDE THE ENCASEMENT PIPE. TO PROVIDE SUPPORT AROUND THE PERIPHERY OF THE PIPE SHOULD THE PIPE TWIST AS IT IS PUSHED THROUGH THE CASING, THE SPACERS SHALL BE OF A PROJECTION TYPE THAT HAS A MINIMUM NUMBER OF PROJECTIONS AROUND THE CIRCUMFERENCE TOTALLING THE NUMBER OF DIAMETER INCHES. FOR EXAMPLE, 8" PIPE SHALL HAVE A MINIMUM OF 8 PROJECTIONS AND 18" PIPE SHALL HAVE A MINIMUM NUMBER OF 18 PROJECTIONS.

CASING SPACERS SHALL HAVE A MAXIMUM SPACING SPAN OF 5 FEET. THE SPAN BETWEEN SPACERS SHOULD RESULT IN CONSERVATIVE LONG TERM SAFETY FACTOR PROVIDED TOTAL LOAD PER SPACER DOES NOT EXCEED THE MAXIMUM LOAD FOR PIPE FULL OF LIQUID PER SPACER LISTED IN THE LITERATURE FOR CLASS SPACER USED. SPACERS SHALL HAVE A MINIMUM HEIGHT THAT CLEARS THE PIPE BELL OR AS OTHERWISE INDICATED ON PLANS. CASING SPACERS SHALL USE DOUBLE BACKED TAPE PROVIDED WITH THE SPACERS, TO FASTEN TIGHTLY ONTO THE CARRIER PIPE, SO THAT THE SPACERS DO NOT MOVE DURING INSTALLATION.

PIPE CASING SPACER DETAIL
N.T.S.

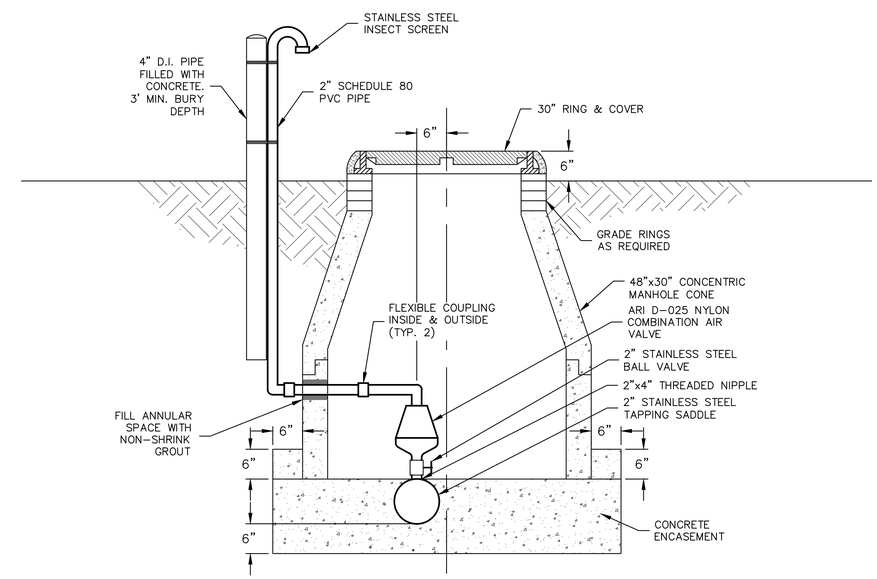

2" AIR RELEASE VALVE
FOR FORCE MAIN
N.T.S.

NO.	REVISION	DATE

DESIGN BY:	TRC
DRAWN BY:	TRC
CHECKED BY:	TRC
SCALE:	NONE
JOB NUMBER:	-

TOWN OF LITTLE ELM, TEXAS
STANDARD DETAILS
SANITARY SEWER STANDARD DETAILS 3 OF 3

LITTLEELM

SHEET
18 OF 21

MAY 2016

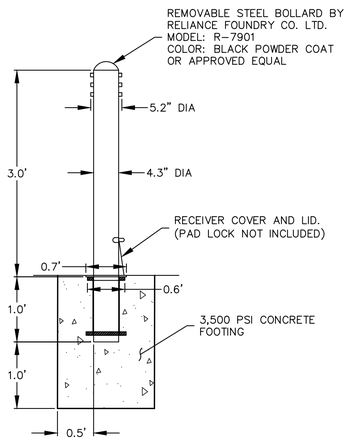

REMOVABLE BOLLARD DETAIL
N.T.S.

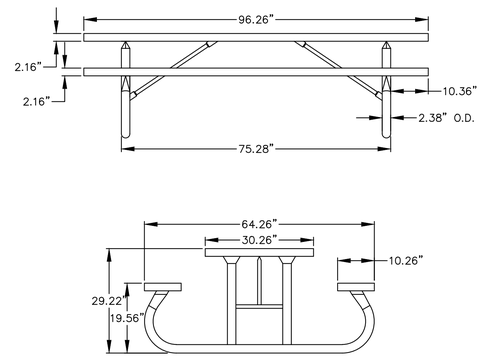

NOTE:
PICNIC TABLE SHALL BE ANOVA MODEL 2014, 8' PERFORATED STEEL PICNIC TABLE, TRADITIONAL EDGE, FLAT BENCH SEATS, PORTABLE MOUNT. FRAME SHALL BE BLACK IN COLOR, TABLE AND BENCH SEATS SHALL BE BRONZE IN COLOR, WITH 10'X10' REINFORCED CONCRETE PAD.

PICNIC TABLE DETAIL
N.T.S.

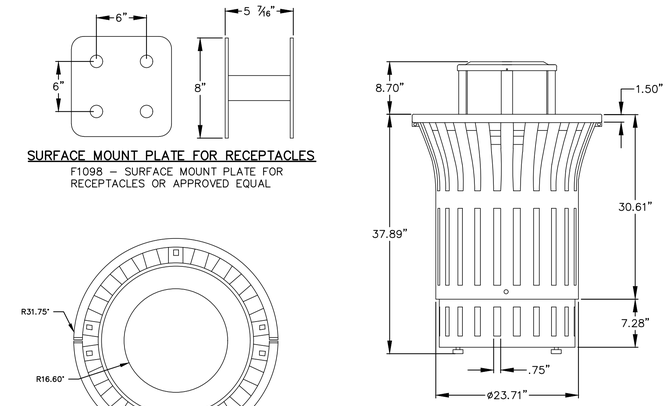

FINISH: FUSION ADVANTAGE: HEAT INFUSED PLASTISOL – CREATING AN IMPERVIOUS RUST PROOF BARRIER MATERIAL: 12-GAUGE SLOTTED STEEL WITH .75" GAP SLOTTED PATTERN. BLACK IN COLOR.

THE RECEPTACLE IS SHIPPED FULLY ASSEMBLED AND READY FOR USE. 20 YEAR LIMITED STRUCTURAL WARRANTY WITH 7 YEAR FINISH WARRANTY

NOTES:
1. INSTALLATION TO BE COMPLETED IN ACCORDANCE WITH MANUFACTURER'S SPECIFICATIONS.
2. ALL DIMENSIONS ARE CONSIDERED TRUE AND REFLECT MANUFACTURER'S SPECIFICATIONS.
3. ANOVA MODEL L1380BT – 55 GALLON RENDEZVOUS SLOTTED STEEL RECEPTACLE WITH BONNET TOP, RUBBER FEET, PLASTIC LINER, TRADITIONAL SURFACE MOUNT (F1098)

TRASH RECEPTACLE DETAIL
N.T.S.

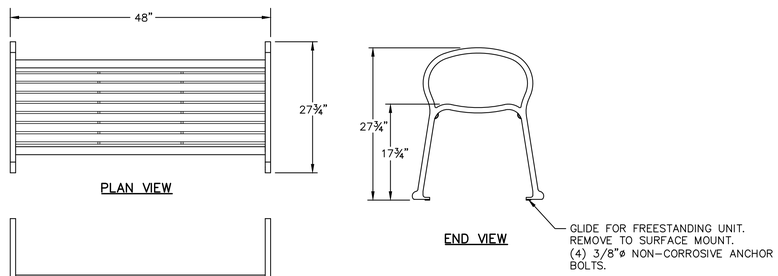

NOTE:
BENCH SHALL BE LANDSCAPE FORMS MODEL SCARBOROUGH, 48" WITH HORIZONTAL STRAP SEAT, BLACK IN COLOR, WITH 10'x10' REINFORCED CONCRETE PAD.

BACKLESS BENCH DETAIL
N.T.S.

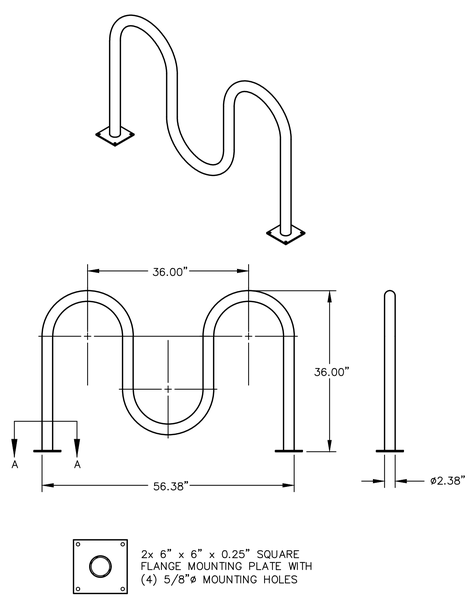

NOTE:
1. DO NOT SCALE DRAWING.
2. INSTALLATION TO BE COMPLETED IN ACCORDANCE WITH MANUFACTURER'S SPECIFICATIONS.
3. BLACK IN COLOR
4. BIKE RACK SHALL BE SARIS MODEL 2103 5-BIKE FM WAVE RACK, WITH 10'X10' REINFORCED CONCRETE PAD.

BIKE RACK DETAIL
N.T.S.

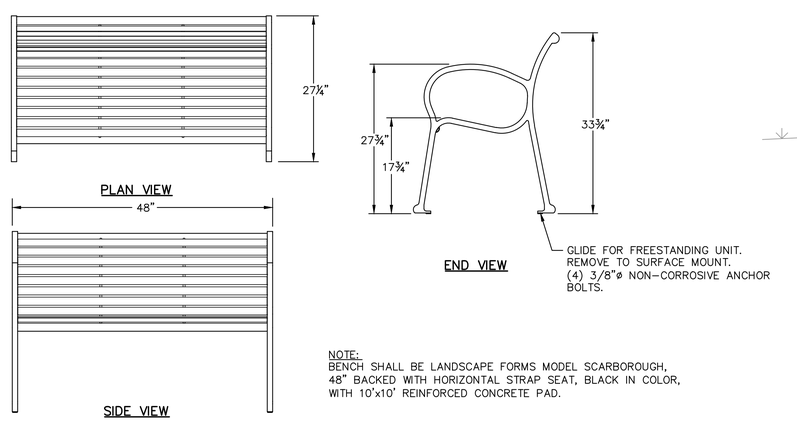

NOTE:
BENCH SHALL BE LANDSCAPE FORMS MODEL SCARBOROUGH, 48" BACKED WITH HORIZONTAL STRAP SEAT, BLACK IN COLOR, WITH 10'x10' REINFORCED CONCRETE PAD.

PARK BENCH DETAIL
N.T.S.

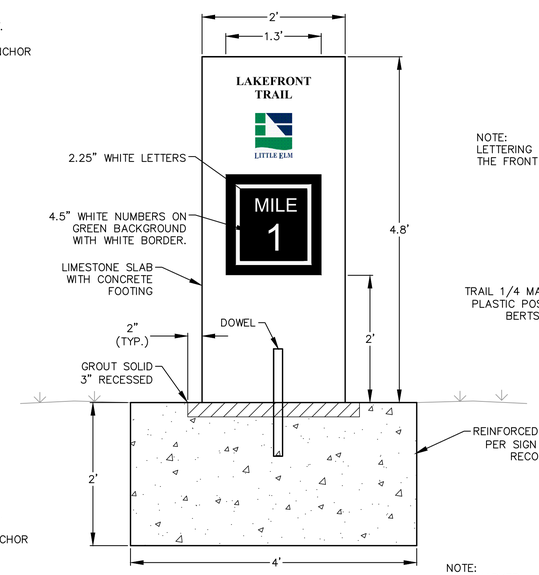

MILE MARKER

NOTE:
MILE MARKER, LITTLE ELM LOGO, AND TRAIL NAME TO BE SHOWN IN COLOR ON FRONT AND BACK OF SIGN.

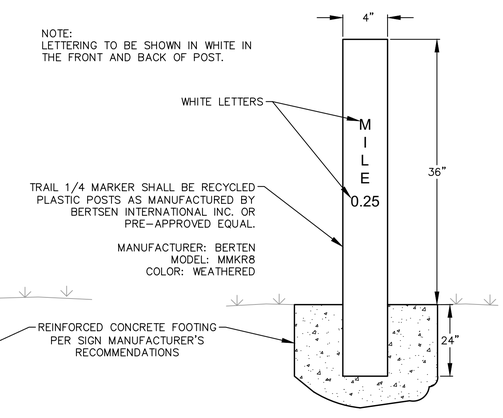

1/4 MILE MARKER

TRAIL MARKER DETAILS
N.T.S.

DATE	REVISION	NO.	DESIGN BY: TRC	DRAWN BY: TRC	CHECKED BY: TRC	SCALE: NONE	JOB NUMBER: –

TOWN OF LITTLE ELM, TEXAS
STANDARD DETAILS
PARKS DETAILS

LITTLE ELM

SHEET
19 OF 21

MAY 2016

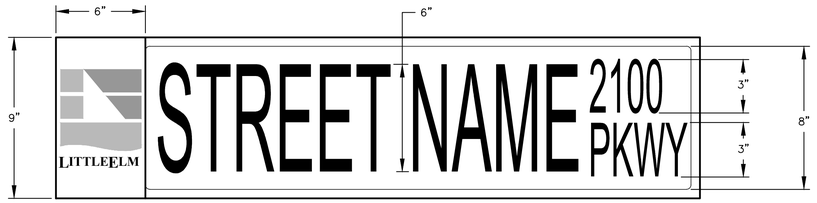

1. LOCATION
   - NINE INCH (9") EXTRUDED BLADES SHALL BE USED AT ALL INTERSECTIONS.
2. BLADE REQUIREMENTS
   - NINE INCH (9") EXTRUDED BLADE SHALL BE ALUMINUM.
3. LETTERING ALIGNMENT
   - STREET NAME SHALL BE LEFT JUSTIFIED.
   - BLOCK NUMBERS SHALL BE LOCATED IN UPPER RIGHT HAND CORNER.
   - ABBREVIATED STREET DESIGNATIONS SHALL BE LOCATED IN THE LOWER RIGHT HAND CORNER.
4. LETTERING FOR NINE INCH (9") EXTRUDED BLADES
   - LETTERS SHALL BE UPPER & LOWERCASE.
   - FONT SHALL BE FEDERAL HIGHWAY SERIES "B" OR SERIES "C". (MANUFACTURER WILL DETERMINE BEST SERIES TO USE BASED UPON LENGTH OF BLADE AND LENGTH OF NAME)
   - LETTERS AND NUMBERS IN STREET NAME SHALL BE SIX INCHES (6") TALL.
   - LETTERS IN ABBREVIATED STREET DESIGNATIONS AND BLOCK NUMBERS SHALL BE THREE INCHES (3") TALL. (I.E, LN, PKWY, DR, CT, ETC.)
5. SIGN SHEETING AND COLORS
   - SHEETING SHALL BE HIGH INTENSITY.
   - BACKGROUND COLOR SHALL BE GREEN.
   - LEGEND SHALL BE WHITE.
   - TOWN OF LITTLE ELM LOGO SHALL BE LEFT JUSTIFIED.
6. NO OUTLET STREETS
   - FOR A STREET WITH ONLY ONE CUL-DE-SAC END (TYPICAL) A STANDARD W 14-2a "NO OUTLET" SHALL BE MOUNTED AT THE END OF STREET NAME BLADE.
   - PARKING LOT TRIP SHALL BE WHITE
   - IN THE CASE OF A STREET WITH TWO CUL-DE-SAC ENDS, TWO (2) STANDARD W 14-2a "NO OUTLET" SIGNS SHALL BE MOUNTED AT THE ENDS OF THE STREET NAME BLADE WITH ARROWS PLACED IN THE APPROPRIATE DIRECTIONS.
7. BLOCK NUMBER
   - DEVELOPERS AND CONTRACTORS ORDERING SIGNS SHOULD CONTACT PUBLIC WORKS AT (214) 975-0470. BLOCK NUMBERS ARE REQUIRED ON ALL STREET NAME BLADES, EVEN IF NO HOUSES OR BUILDINGS FRONT ONTO THE STREET
8. MANUFACTURER CONTACT
   - BRANDON INDUSTRIES, INC. 1601 W. WILMETH ROAD, MCKINNEY, TEXAS 75069. (972) 542-3000, OR APPROVED EQUAL

STREET BLADE DETAIL
N.T.S.

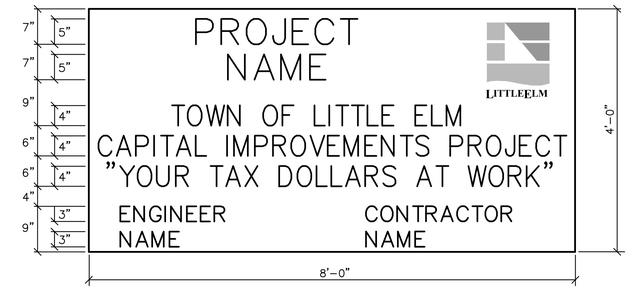

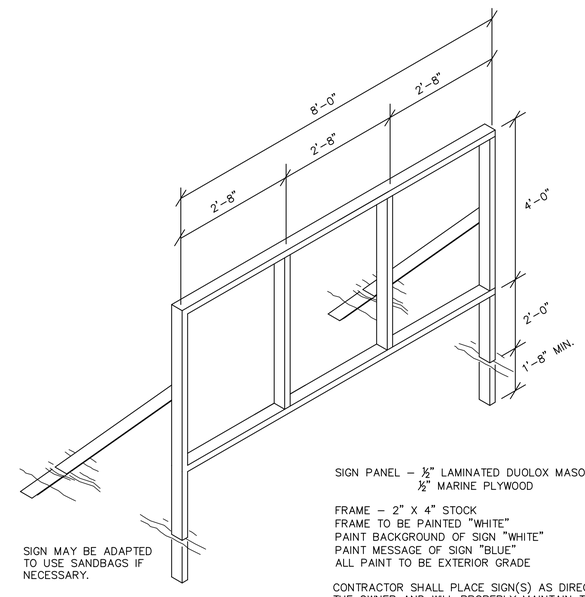

SIGN MAY BE ADAPTED TO USE SANDBAGS IF NECESSARY.

SIGN PANEL – ½" LAMINATED DUOLOX MASONITE OR ½" MARINE PLYWOOD

FRAME – 2" X 4" STOCK
FRAME TO BE PAINTED "WHITE"
PAINT BACKGROUND OF SIGN "WHITE"
PAINT MESSAGE OF SIGN "BLUE"
ALL PAINT TO BE EXTERIOR GRADE

CONTRACTOR SHALL PLACE SIGN(S) AS DIRECTED BY THE OWNER AND WILL PROPERLY MAINTAIN THE SIGN(S) DURING CONSTRUCTION

PROJECT SIGN DETAIL
N.T.S.

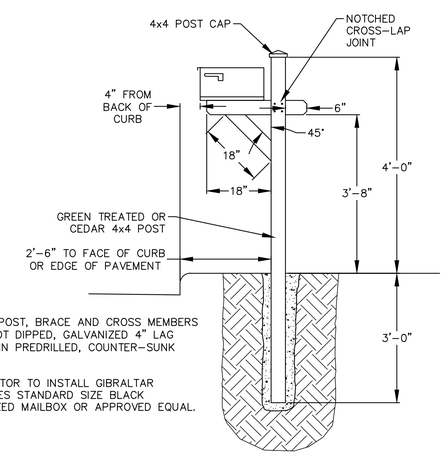

NOTES:

1. ATTACH POST, BRACE AND CROSS MEMBERS USING HOT DIPPED, GALVANIZED 4" LAG SCREWS IN PREDRILLED, COUNTER-SUNK HOLES.
2. CONTRACTOR TO INSTALL GIBRALTAR INDUSTRIES STANDARD SIZE BLACK GALVANIZED MAILBOX OR APPROVED EQUAL.

TYPICAL MAILBOX CONSTRUCTION
N.T.S.

DATE	
REVISION	
NO.	
DESIGN BY:	TRC
DRAWN BY:	TRC
CHECKED BY:	TRC
SCALE:	NONE
JOB NUMBER:	–

TOWN OF LITTLE ELM, TEXAS
STANDARD DETAILS
MISCELLANEOUS DETAILS 1 OF 2

LITTLEELM

SHEET 20 OF 21

MAY 2016

NOTES:

1. SHOP DRAWINGS SHALL BE SUBMITTED TO ENGINEER FOR APPROVAL PRIOR TO FABRICATION OF ALL ITEMS. SHOP DRAWINGS SHALL INCLUDE ALL SHOP AND ERECTION DETAILS.
2. STEEL TUBING SHALL CONFORM TO ASTM A500, GR B. ALL SURFACES SHALL BE PRIME COAT PAINTED WITH 2 COATS OF TNEMEC RED METAL PRIMER.
3. ALL SURFACES SHALL BE PAINTED WITH 2 COATS OF BENJAMIN MOORE RUST INHIBITOR PAINT SEMI-GLOSS BLACK OR APPROVED EQUAL. ALL TUBES AND FITTINGS SHALL BE FLUSH AND FREE OF SHARP EDGES, SPURS, AND DENTS. ALL RAILINGS SHALL BE FABRICATED IN THE SHOP TO FIT FIELD CONDITIONS.
4. ALL ITEMS SHALL BE INSTALLED AND SET IN THEIR CORRECT LOCATIONS AS SHOWN ON THE DRAWINGS. THEY SHALL BE SET LEVEL, PLUMB, SQUARE, AND AT THE PROPER ELEVATION.
5. POSTS SHALL BE SET PLUM. RAILS SHALL FOLLOW THE SLOPE. CONTRACTOR SHALL VERIFY CONDITIONS PRIOR TO FABRICATION.

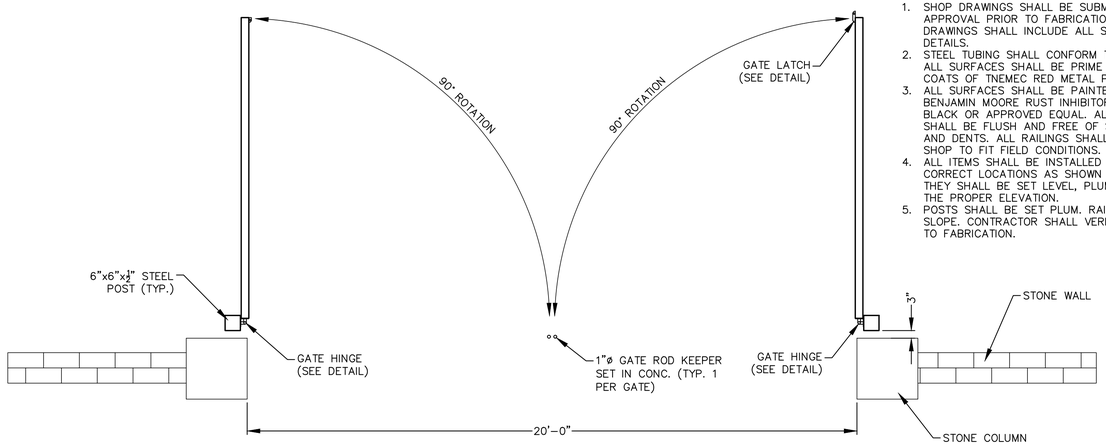

PLAN VIEW

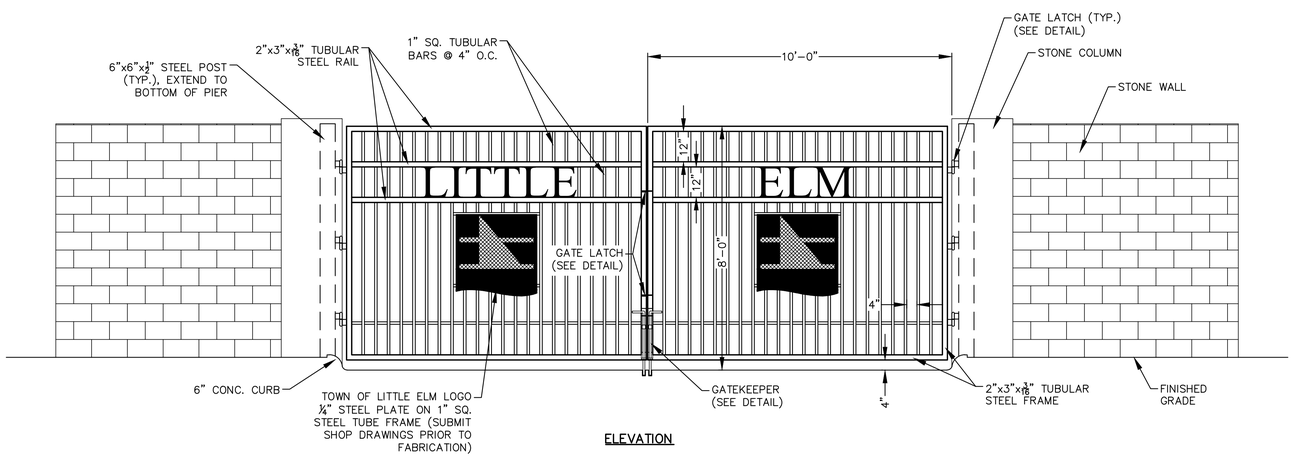

ELEVATION

20'-0" DOUBLE SWING GATE
N.T.S.

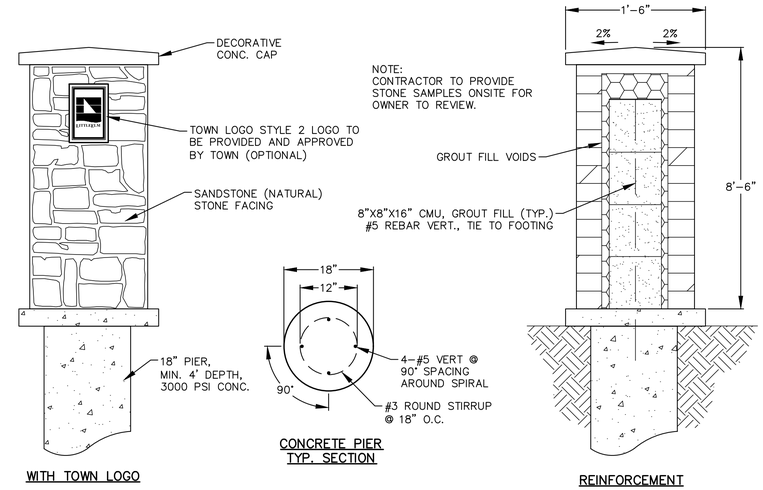

STONE COLUMN DETAIL
N.T.S.

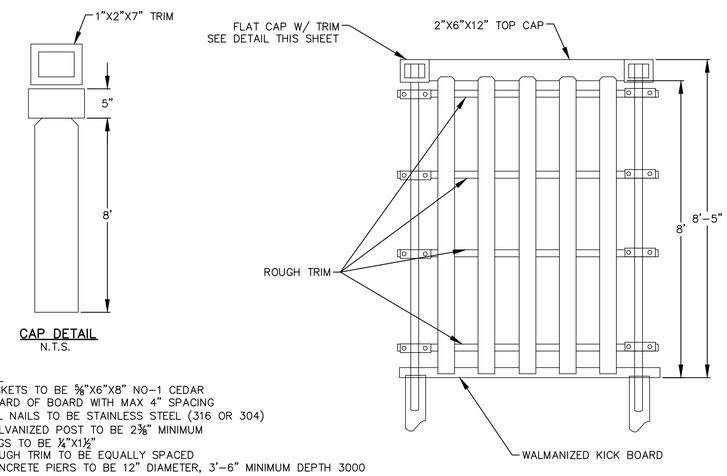

CAP DETAIL
N.T.S.

NOTES:

1. PICKETS TO BE 5/8"X6"X8" NO-1 CEDAR
2. BOARD OF BOARD WITH MAX 4" SPACING
3. ALL NAILS TO BE STAINLESS STEEL (316 OR 304)
4. GALVANIZED POST TO BE 2 3/8" MINIMUM
5. LAGS TO BE 1/4"X1 1/2"
6. ROUGH TRIM TO BE EQUALLY SPACED
7. CONCRETE PIERS TO BE 12" DIAMETER, 3'-6" MINIMUM DEPTH 3000 PSI CONCRETE.
8. ALL CEDAR MATERIAL TO BE PRE-STAINED. STAIN SAMPLE SHALL BE APPROVED BY TOWN PRIOR TO INSTALLATION.
9. STONE COLUMNS TO BE INSTALL AT CORNERS AND MIDPOINT OF FENCE SECTION, UNLESS OTHERWISE INDICATED ON PLANS.
10. FENCING SHALL MATCH THE EXISTING CEDAR FENCING INSTALLED AROUND THE LITTLE ELM SERVICE CENTER.

BOARD ON BOARD CEDAR FENCE
N.T.S.

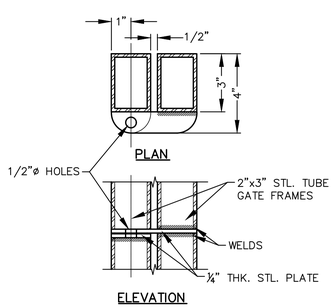

GATE LATCH DETAIL
N.T.S.

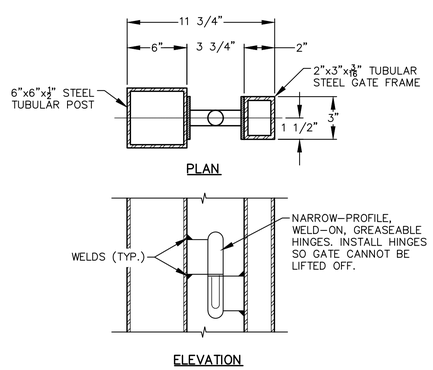

GATE HINGE DETAIL
N.T.S.

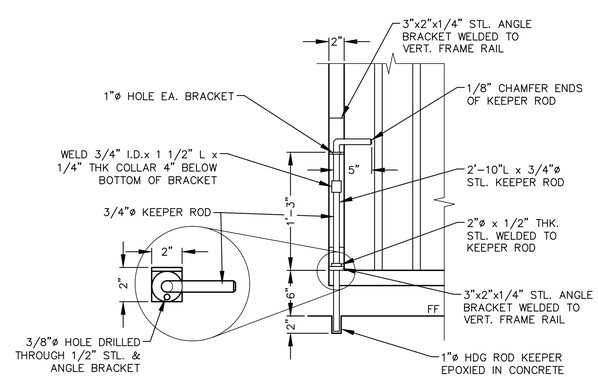

GATE KEEPER ROD DETAIL
N.T.S.

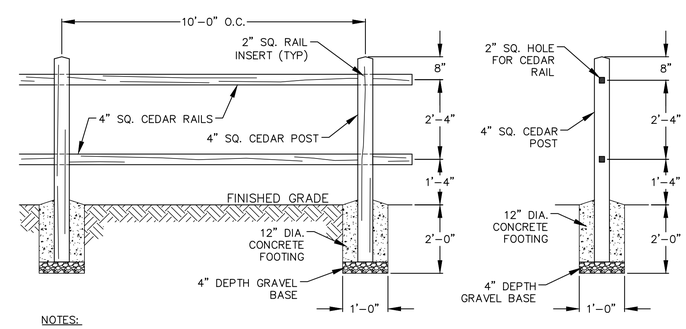

NOTES:

1. FENCE SHALL BE CONSTRUCTED OF WESTERN RED CEDAR.

SPLIT RAIL FENCE DETAIL
N.T.S.

DATE	REVISION	NO.	DESIGN BY: TRC	DRAWN BY: TRC	CHECKED BY: TRC	SCALE: NONE	JOB NUMBER: -

TOWN OF LITTLE ELM, TEXAS
STANDARD DETAILS
MISCELLANEOUS DETAILS 2 OF 2

LITTLE ELM

SHEET
21 OF 21

MAY 2016